FUME HOOD CERTIFIED

Q200 SF_6 Analyzer

User Manual

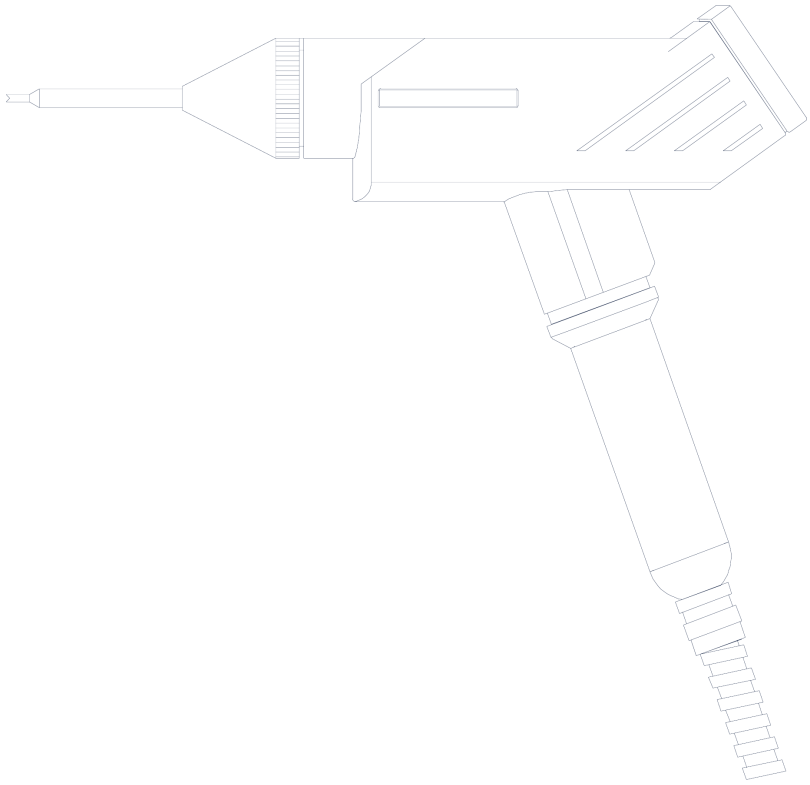

Revision 11 | Updated September 2024 | Manufactured by D-Industrial Technology Ltd

Exclusive North American Distributor

Fume Hood Certified, LLC
20817 N 21st Ave, Suite 14
Phoenix, AZ 85027
(623) 226-8260
alex@fumehoodcertified.com
www.fumehoodcertified.com

Watch Q200 training videos
on our YouTube channel

Disclaimer

D-Industrial Technology Ltd. makes no representations or warranties with respect to the contents or use of this manual and specifically disclaims any express or implied warranties of merchantability or fitness for any particular purpose. Further D-Industrial Technology Ltd reserves the right to revise this manual and to make changes to its content, at any time, without obligation to notify any person or entity of such revisions or changes.

Copyright

No part of this manual may be reproduced or transmitted in any form or by any means, electronic or mechanical, including photocopying and recording, for any purpose other than the purchaser's personal use without the written consent of the copyright holder.

©D-Industrial Technology Ltd, October 2003-2016. All rights reserved.

Trademarks

Q200 ® is a registered trademark of D-Industrial Technology Ltd
SPC-PC IV™ is a registered trademark of Quality America, Inc.
Windows™ is a trademark of Microsoft Corporation.

Sales and Support

US and North America

Fume Hood Certified, LLC
20817 N 21st Ave, Suite 14
Phoenix, AZ 85027
(623) 226-8260
alex@fumehoodcertified.com
www.fumehoodcertified.com

Distributed in North America by Fume Hood Certified, LLC | www.fumehoodcertified.com | (623) 226-8260

Document History

Part Number: 200120

Revision History:

Issue	Change Note	Date	Description
1	N/A	04/02/1994	First Edition
2	N/A	12/03/1994	First Revision
3	N/A	14/12/1994	Second Revision
4	1348	06/01/1995	Spares Updated
5	1415	25/01/1996	EC Revision
6	0051	02/07/1997	Sinter References
7	0263	08/11/1999	H, M & L Sinters. Fixed exponent display
8	0536	05/02/2002	Sales support information and document format updated.
9	0627	1/10/2003	Sales support information updated
10	0760	2/26/2007	Added ROHS declaration

Distributed in North America by Fume Hood Certified, LLC | www.fumehoodcertified.com | (623) 226-8260

About This Manual

This manual is designed to provide full information about the setting up and use of the Q200.

- **Section 1** WARNING AND CAUTIONS gives general information to be aware of when installing or using the Q200.
- **Section 2** INTRODUCTION gives a general introduction to the Q200 and its operation.
- **Section 3** UNPACKING provides a checklist for the components supplied with the Q200.
- **Section 4** INSTALLATION REQUIREMENTS explains the installation requirements for the Q200 before use.
- **Section 5** CONSOLE FAMILIARISATION familiarises the user with the Q200's console and front panel interface.
- **Section 6** HAND UNIT FAMILIARISATION familiarises the user with the hand unit, key panel and controls.
- **Section 7** POWER UP AND INSTALLATION this section describes how to switch the Q200 on and the initialisation routine that follows.
- **Section 8** PROGRAMMING THE Q200 gives a detailed description of each program function and instructions for viewing and altering them.
- **Section 9** CALIBRATING THE Q200 describes the procedure for calibrating the Q200 to a standard leak.
- **Section 10** THE Q200 IN USE gives guidance on the precautions that may need to be taken when calibrating and using the Q200 in a typical industrial environment.
- **Section 11** INTERFACING THE Q200 describes how the Q200 can be connected to peripheral devices such as printers or chart recorders.
- **Appendix A** Q200 Specification gives a full specification for the Q200.
- **Appendix B** Preventative Maintenance gives information on general preventative maintenance for the Q200.
- **Appendix C** Fault/Error/Warning Messages explains possible fault, error and warning conditions and suggests corrective actions.
- **Appendix D** Spares/Options List gives a list of the spares and options available for the Q200.
- **Appendix E** RS232 Connector Details lists the pin-outs and connectors for the Q200.
- **Appendix F** Applications describes some of the typical application areas in which the Q200 is used.

Distributed in North America by Fume Hood Certified, LLC | www.fumehoodcertified.com | (623) 226-8260

- **Appendix G** Changing the Internal Gas Cylinder details the procedure for changing the internal gas cylinder on the Q200.

- **Appendix H** Installing/Changing the Battery details the procedure for installing and changing the battery on the Q200.

- **Appendix I** Changing The Probe/Sinter details the procedure for changing the Q200's hand unit probe and sinter.

- **Appendix J** Leak Rate and Concentration Formulae lists the formulae for converting between leak rates in different units and between leak rate and concentration.

- **Appendix K** Program Structure details the program structure for reference when programming the Q200 for use.

- Glossary of terms used within this manual.

- **Index.**

Distributed in North America by Fume Hood Certified, LLC | www.fumehoodcertified.com | (623) 226-8260

Table of Contents

Disclaimer i
Copyright i
Trademarks i
Sales and Support i
Document History i
About This Manual ii
Table of Contents 1
1.0 WARNING AND CAUTIONS 1-1
1.1 HAND UNIT DETECTOR 1-1
1.2 Sinter 1-1
1.3 Configuring the Q200 1-1
1.3.1 Changing from capillary mode to sinter mode. 1-2
1.3.2 Changing from sinter mode to capillary mode. 1-2
1.3.3 Changing between sinters 1-3
1.3.4 Re-configuring the instrument 1-3
1.3.5 Measuring ranges and configuration codes 1-4
1.4 ARGON GAS SUPPLY 1-5
1.5 POWER SUPPLY 1-5
1.6 TRANSPORTING THE Q200 1-6
1.7 DISPOSAL 1-6
1.8 ENVIRONMENTAL 1-6
1.9 EC DECLARATION OF CONFORMITY 1-7
2.0 INTRODUCTION 2-1
3.0 UNPACKING 3-1
4.0 INSTALLATION REQUIREMENTS 4-1
4.1 REMOVING THE CASE LID 4-1
4.2 GAS SUPPLY 4-1
4.3 POWER SUPPLY 4-2
4.4 STORAGE AND OPERATING ENVIRONMENT 4-2
4.5 OPERATING MODES 4-2
4.5.1 PORTABLE INSTALLATION 4-2
4.5.1.1 CHECKING THE INTERNAL ARGON SUPPLY 4-3
4.5.1.2 CHECKING THE BATTERY 4-3
4.5.2 FIXED INSTALLATION 4-3
4.5.2.1 RUNNING FROM AN EXTERNAL GAS SUPPLY 4-3
4.5.2.2 RUNNING FROM THE EXTERNAL POWER SUPPLY 4-4
5.0 CONSOLE FAMILIARISATION 5-1
5.1 FRONT PANEL LAYOUT 5-1
5.1.1 KEY-SWITCH ORIENTATION 5-1
5.1.2 FRONT PANEL KEYS 5-2
5.1.3 BATTERY CHARGER INDICATOR 5-2
6.0 HAND UNIT FAMILIARISATION 6-1
6.1 HAND UNIT KEYS 6-2
6.2 HAND UNIT INDICATORS 6-2
6.2.1 WARNING LED 6-2
6.2.2 PEAK HOLD LED 6-2
6.3 HAND UNIT BAR GRAPH DISPLAY 6-2
7.0 POWER UP AND INSTALLATION 7-1
7.1 SWITCH ON 7-1
7.2 INSTALLATION 7-1
8.0 PROGRAMMING THE Q200 8-1
8.1 CALIBRATE MENU 8-1
8.1.1 CALIBRATION LEVEL 8-1
8.1.2 RE-CALIBRATION INTERVAL 8-2

Distributed in North America by Fume Hood Certified, LLC | www.fumehoodcertified.com | (623) 226-8260

8.1.3 CALIBRATION FACTOR....8-3
8.2 CONFIGURE MENU....8-3
8.2.1 CLEAN TIME....8-3
8.2.2 ALARM LEVEL....8-3
8.2.3 TRACE GAS CONCENTRATION....8-4
8.2.4 AUTO ZERO....8-5
8.2.5 DISPLAY TYPE....8-5
8.2.6 RESET PARAMETERS....8-6
8.2.7 GAS SUPPLY....8-6
8.3 DIAGNOSTICS MENU....8-7
8.3.1 BATTERY VOLTAGE....8-7
8.3.2 TEMPERATURE....8-7
8.3.3 DETECTOR FREQUENCY....8-7
8.3.4 RE-CALIBRATION....8-8
8.3.5 SOFTWARE VERSION NUMBER....8-8
8.4 SET DATE/TIME MENU....8-8
8.4.1 DATE....8-8
8.4.1.1 DAY....8-9
8.4.1.2 MONTH....8-9
8.4.1.3 YEAR....8-9
8.4.2 TIME....8-10
8.4.2.1 HOURS....8-10
8.4.2.2 MINUTES....8-10
8.5 EXITING THE MENU STRUCTURE....8-11
9.0 CALIBRATING THE Q200....9-1
10.0 THE Q200 IN USE....10-1
10.1 STANDBY MODE....10-1
10.2 SAMPLE MODE....10-1
10.3 INSTRUMENT CALIBRATION....10-2
10.4 GENERAL TIPS ON LEAK DETECTION....10-3
10.5 ADJUSTING THE VOLUME....10-6
10.6 BACKGROUND CONTAMINATION....10-6
10.7 RESULTS STORAGE AND PRINTOUT....10-7
11.0 INTERFACING THE Q200....11-1
11.1 INTERFACING TO A PRINTER....11-1
11.2 INTERFACING TO A CHART RECORDER....11-1
Appendix A Q200 Specification....A-1
Appendix B Preventative Maintenance....B-1
Appendix C Fault/Error/Warning Messages....C-1
Appendix D Spares/Options List....D-1
Appendix E RS232 Connector Details....E-1
Appendix F Applications....F-1
Appendix G Changing the Internal Gas Cylinder....G-1
Appendix H Installing/Changing the Battery....H-1
Appendix I Changing The Probe/Sinter....I-1
Appendix J Leak Rate and Concentration Formulae....J-1
Appendix K Program Structure....K-1
Glossary....L-1
Index....i

Distributed in North America by Fume Hood Certified, LLC | www.fumehoodcertified.com | (623) 226-8260

List Of Figures

Figure 1: Q200 Case Lid Containing Accessories..... 3-1
Figure 2 Removing the Case Lid..... 4-1
Figure 3: Front Panel Layout..... 5-1
Figure 4: Hand Unit Display and Keyboard..... 6-1
Figure 5: Changing the Internal Gas Cylinder..... G-1
Figure 6: Changing the Battery H-1
Figure 7: Fitting the Probe..... I-1
Figure 9: Location of Sinter..... I-2
Figure 10: Q200 Menu Structure.....K-1

Distributed in North America by Fume Hood Certified, LLC | www.fumehoodcertified.com | (623) 226-8260

1.0 WARNING AND CAUTIONS

This section explains the warnings and cautions that should be observed when installing or using the Q200.

1.1 HAND UNIT DETECTOR

The detector operates at elevated temperatures; the user should proceed with caution whenever the hand unit nozzle is removed.

The detector contains a radioactive source that should never be tampered with. The detector contained within the hand unit has the following characteristics:

Nuclide	Nickel 63
Radiation	Beta rays
Content	370 MBq
Beta energy	60 keV Max
Range in air	50 mm approximately
Half-life	100 years

The primary Beta rays are completely contained within the detector cell and provide no hazard to the user during normal operation. National Regulations relating to the control of radioactive sources vary from country to country. It is a requirement in some countries, and a practice that we would recommend that a competent person be appointed to be responsible for the instrument. Their duties would be to ensure proper care is taken of the instrument and all users are instructed in the use of the instrument and not to attempt access to the radioactive sources. In the event of damage or loss occurring, there may be a requirement to notify the competent authority.

Specific instructions may accompany this manual describing any further national regulations governing the use, storage and transportation of equipment containing radioactive sources. In the UK the radioactive source must be checked at least every 24 months for leakage. The supplier of the equipment can provide this service.

1.2 SINTER

Periodically the user should remove the nozzle and inspect the sinter, see Appendix I for more information. A new sinter should be fitted if the current sinter is discoloured indicating deposits of contaminants exist on its surface. Progressive blockage of the sinter can also be observed by progressive reduction in detector response to standard leaks or increasing calibration factors when performing calibration sequences.

1.3 CONFIGURING THE Q200

The Q200 has been factory configured to match your requirements with respect to language option, the type of trace gas to be used, probe type and the displayed units.

If a configuration change is required, it can be performed as detailed below.

Distributed in North America by Fume Hood Certified, LLC | www.fumehoodcertified.com | (623) 226-8260

1.3.1 CHANGING FROM CAPILLARY MODE TO SINTER MODE.

CAUTION: Before changing the hand unit probe ensure that the hand unit detector block is cool.

1. Remove the capillary probe nozzle from the nozzle cone by pulling the probe nozzle out of the nozzle cone. Ensure that the capillary probe nozzle is pulled out of the nozzle cone in the line of the hand unit to avoid bending the capillary probe needle.

2. Unscrew the nozzle cone from the hand unit.

3. Unscrew the capillary needle probe and its housing from the front face of the detector assembly and store in a clean dry place. Note that the small knurled cap on the housing retains the capillary needle probe in the housing. Unscrewing the housing using the larger knurled flange adjacent to the front face of the detector assembly will allow the needle probe and its housing to be removed from the detector assembly as a single entity.

4. Locate the required sinter and inspect the seal around the periphery of the sinter to ensure that it is not damaged. Damage to the seal will compromise the performance of the instrument by allowing an excessive amount of air to enter the detector. Appendix D contains details of replacement seals that can be fitted to the sinter. Fit the sinter into the front of the detector assembly. Use a broad flat bladed screwdriver to tighten the sinter into the detector assembly.

5. Screw the nozzle cone back into place on the hand unit.

6. Push the sinter probe nozzle firmly into the nozzle cone.

7. Re-configure the instrument as outlined in 1.3.3.

8. Perform a cleaning cycle of at least one hour.

1.3.2 CHANGING FROM SINTER MODE TO CAPILLARY MODE.

CAUTION: Before changing the hand unit probe ensure that the hand unit detector block is cool.

1. Unscrew the nozzle cone from the hand unit.

2. Using a broad bladed screwdriver, unscrew the sinter assembly from the front face of the detector assembly and store in a clean dry place.
3. Remove the sinter probe nozzle from the nozzle cone.

4. Locate the capillary needle probe and it's housing and inspect the seal around the periphery of the housing to ensure that it is not damaged. Damage to the seal will compromise the performance of the instrument by allowing an excessive amount of air to enter the detector. Appendix D contains details of replacement seals that can be fitted to the housing. Screw the capillary needle probe and its housing into the front face of the detector assembly until finger tight.

5. Screw the nozzle cone back into place on the hand unit.

Distributed in North America by Fume Hood Certified, LLC | www.fumehoodcertified.com | (623) 226-8260

6. Push the capillary probe nozzle over the capillary needle probe and into the nozzle cone, taking care to ensure that no bending stresses are applied to the capillary needle probe.

7. Re-configure the instrument as outlined in 1.3.3.

8. Perform a cleaning cycle of at least one hour.

1.3.3 CHANGING BETWEEN SINTERS

CAUTION: Before changing the hand unit probe ensure that the hand unit detector block is cool.

1. Unscrew the nozzle cone from the hand unit.

2. Using a broad bladed screwdriver, unscrew the sinter assembly from the front face of the detector assembly and store in a clean dry place.

3. Locate the required sinter and inspect the seal around the periphery of the sinter to ensure that it is not damaged. Damage to the seal will compromise the performance of the instrument by allowing an excessive amount of air to enter the detector. Appendix D contains details of replacement seals that can be fitted to the sinter. Fit the sinter into the front of the detector assembly. Use a broad flat bladed screwdriver to tighten the sinter into the detector assembly.

4. Screw the nozzle cone back into place on the hand unit.

5. Re-configure the instrument as outlined below.

6. Perform a cleaning cycle of at least one hour.

1.3.4 RE-CONFIGURING THE INSTRUMENT

1. Switch the instrument on and ensure that the security key-switch is in the program position.

2. With the console display reading 'Calibrate' press the Zero ⊘ (hand unit) key and the Standby\Run ⏻ (console) key simultaneously. This will bring up a four-digit numeric configuration code on the console display. The first digit of the code will be flashing.

Code	**1234**

Digit 1234

Code

Digit 1: Agent: 0. English

Distributed in North America by Fume Hood Certified, LLC | www.fumehoodcertified.com | (623) 226-8260

1. American
2. German

Digit 2: Units:
0. ml/s
1. ppm

Digit 3: Gas Type:
0. SF6
1. Undefined

Digit 4: Probe Type:
0. H Sinter
1. Capillary
2. M Sinter
3. L Sinter

3. Using the Increment \ Decrement △ ▽, Scroll Left \ Scroll Right ◁ ▷ keys the desired configuration code can be entered. If the operator then presses the Select ⊜ key the instrument will verify that the code entered is a valid one. If an invalid code is entered, then an 'Invalid Code' message will be displayed for a two second interval, then the operator will be given two further chances to re-enter a valid code. If a valid code is not entered within three attempts the instrument will revert back to the 'Configure' prompt.

4. If the Select ⊜ key is pressed with a valid code being displayed, a 'Valid Code' message will be displayed for a two-second interval. The instrument will then perform to the new configuration parameters. Note that changing the configuration code clears existing parameters and will set calibration and alarm levels to the default values for the new configuration.

CAUTION: If the instrument is re configured then it should be re calibrated as described in this manual.

1.3.5 MEASURING RANGES AND CONFIGURATION CODES

The following tables illustrate the measuring ranges available for the various inlet probes based on 100% trace gas concentration:

Distributed in North America by Fume Hood Certified, LLC | www.fumehoodcertified.com | (623) 226-8260

Leak-Rate Measuring Ranges For SF_6 / ml/s				
Probe Type	**Capillary**	**H Sinter**	**M Sinter**	**L Sinter**
Range	0.0×10^{-10} ⇓ 1.8×10^{-7}	0.0×10^{-8} ⇓ 1.8×10^{-5}	0.0×10^{-7} ⇓ 1.8×10^{-4}	0.0×10^{-6} ⇓ 1.8×10^{-3}
Alarm/Cal.	1.0×10^{-10} ⇓ 1.8×10^{-7}	1.0×10^{-8} ⇓ 1.8×10^{-5}	1.0×10^{-7} ⇓ 1.8×10^{-4}	1.0×10^{-6} ⇓ 1.8×10^{-3}
Config. Code	0001	0000	0002	0003

Concentration Measuring Ranges For SF_6 / ppm				
Probe Type	**Capillary**	**H Sinter**	**M Sinter**	**L Sinter**
Range	N/A	0.0 ⇓ 18.09	0.0 ⇓ 180.0	0.0 ⇓ 1800
Alarm/Cal.	N/A	0.01 ⇓ 18.00	0.1 ⇓ 180.0	1 ⇓ 1800
Config. Code	N/A	0100	0102	0103

When the M or L Sinters or the Capillary probe are fitted, the ranges over which the instrument may be calibrated are automatically changed to match the usable range of the instrument. Appendix A contains a full list of the operating, calibration and alarm ranges for all the inlet probes over a range of trace gas concentrations.

1.4 ARGON GAS SUPPLY

The instrument requires a supply of Argon that is at least 99.998% pure. This is supplied with the instrument in a gas cylinder that conforms to BS 5045/3/B.

The gas cylinder should be filled to a pressure no greater than 200 bar (2900 PSIG) maximum, and regularly checked for damage or fatigue and that the cylinder is still within the validity of the test period indicated by the plastic collar on the stem of the cylinder valve.

If an external gas supply is used the pressure supplied to the inlet port should not exceed 4 bar (58 PSIG) maximum.

1.5 POWER SUPPLY

The instrument is supplied with an internal 12 Volt, gel electrolyte battery and a battery charger. Both items are designed for use with the Q200 only. The manufacturer accepts no responsibility if either item is operated with any equipment other than the Q200. Information on spares may be found in Appendix D.

The battery charger must be run only from a mains supply that has a protective earth. It is designed to be used on a flat surface next to the instrument and with adequate clearance for ventilation. It should not be used whilst still located in the lid infill.

Distributed in North America by Fume Hood Certified, LLC | www.fumehoodcertified.com | (623) 226-8260

The internal 12 Volt battery has inline protective fuse T2A/250V. A replacement fuse must be of an appropriate type and rating.

1.6 TRANSPORTING THE Q200

Transport of the instrument is subject to regulation in most countries. It is also subject to international rules when transportation is between two different countries. If the instrument needs to be transported, seek expert advice prior to shipping.

1.7 DISPOSAL

If there is an accident that damages the hand unit beyond repair or when the instrument has exceeded its useful life, the unit must be disposed of through an approved contractor. In the United Kingdom, the manufacturer can accept units for disposal. Note that a charge will be made for the disposal of radioactive sources. In other countries, the National Radiological Protection Organisation should be contacted for advice.

1.8 ENVIRONMENTAL

Do not use the instrument:

- In explosive atmospheres.
- Outside the specified operating temperature range.
- With hazardous or toxic gases.
- In an environment where water could be drawn into the probe.
- Where the variation in background level is greater than the calibration level.

Distributed in North America by Fume Hood Certified, LLC | www.fumehoodcertified.com | (623) 226-8260

1.9 EC DECLARATION OF CONFORMITY

As detailed under the following:

- The European Low Voltage Directive 73/23/EEC (amended by 93/68/EEC).
- The Electromagnetic Compatibility Directive 89/336/EEC (amended by 91/263/EEC and 92/31/EEC), the declaration of conformity is provided for the following:

Equipment:	**Q200 Trace Gas Leak Detector**
Manufacturer:	**Uson Ltd** Western Way Bury St. Edmunds Suffolk United Kingdom IP33 3SP
Transposed Harmonised Standards:	**BS EN 61010-1:1993** Safety requirements for electrical equipment for measurement, control and laboratory use. **BS EN 50081-1:1992** Electromagnetic Compatibility: Generic emission standard for light industry. **BS EN 50082-1:1992** Electromagnetic Compatibility: Generic immunity standard for light industry.
Name Of Responsible Person:	**Mr A Hawes**
Signature:	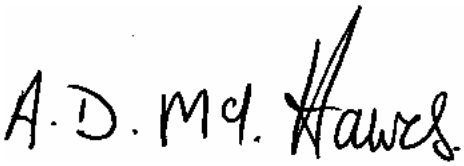
Date:	**12 March 1996**
Position:	**Senior Development Engineer.**
Address Of Responsible Person:	**Uson Ltd** Western Way Bury St. Edmunds Suffolk United Kingdom IP33 3SP

Distributed in North America by Fume Hood Certified, LLC | www.fumehoodcertified.com | (623) 226-8260

2.0 INTRODUCTION

The Q200 is a high sensitivity leak detector used to locate and quantify leaks with electron capturing trace gases. The instrument may be used in a variety of industrial and scientific applications and environments. It is lightweight and robust and comprises a hand unit, control console, rechargeable battery and Argon gas cylinder, contained within a case for complete portability. Facilities are built in to allow the instrument to be operated using external gas and power supplies.

The instrument is microprocessor based, using a Vacuum Fluorescent Display (VFD) to provide a rapid and accurate readout of leak rates. The built-in memory is capable of storing up to one hundred separate leak rate readings, which can be output to a printer via the built in RS232 interface connector.

The detection principle uses a single Electron Capture Detector (ECD), utilising a low power radioactive source contained within the hand unit. To measure for leaks, the component under test is filled with a trace gas until there is a slightly higher pressure than ambient within the component. This condition will cause the trace gas to leak through any cracks, holes or porous areas within the component. Leaking trace gas will then be detected and quantified by the Q200.

Each instrument is factory configured for a specific trace gas and measurement unit. By default the instrument is configured for SF_6 although configuration for other gases is available on special order.

This manual is written specifically for an instrument configured to SF_6, H Sinter and ml/sec. Instruments configured for other gases, sinters and units will perform identically except that some display formats are different, and the range and step sizes for calibration and alarm levels are different. The user may convert between leak rates in different units by referring to Appendix J.

Distributed in North America by Fume Hood Certified, LLC | www.fumehoodcertified.com | (623) 226-8260

3.0 UNPACKING

Every effort is made to ensure that the instrument is despatched from the manufacturers with the contents intact. Please ensure that when unpacking, the following components are present and undamaged, If this is not the case, contact your supplier immediately.

The majority of components supplied with the Q200 are housed in the console case lid, as illustrated in Figure 1.

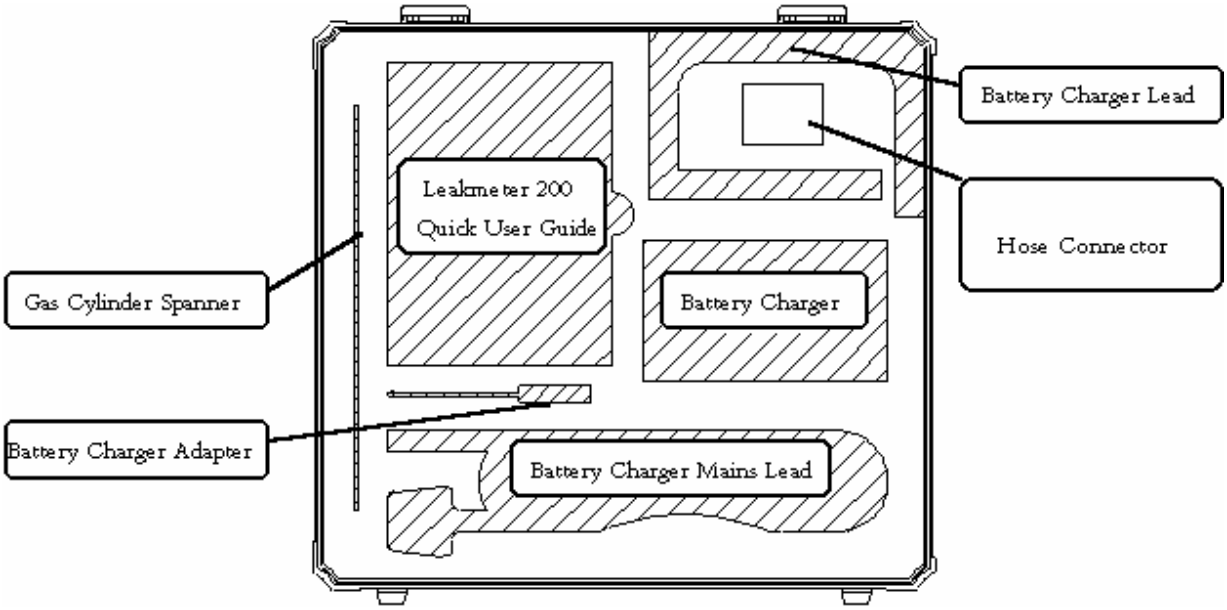

Figure 1: Q200 Case Lid Containing Accessories

- Gas cylinder spanner to allow the internal gas cylinder to be removed.
- Battery charger and lead to allow the internal battery to be recharged in-situ.
- Battery charger adapter to allow a spare battery to be recharged.
- Battery charger mains lead.
- Hose connector to allow the instrument to be supplied with argon from an external source.

Supplied separately should be:

- User manual.
- Calibration certificate.
- Two keys for the key-switch.
- Two keys for the instrument case.

Distributed in North America by Fume Hood Certified, LLC | www.fumehoodcertified.com | (623) 226-8260

- A spare fuse for the battery charger is located in the fuse drawer section of the charger mains socket inlet.

A range of standard leaks to be used during calibration and sinters to modify the operating range of the Q200 are available from your supplier, see Appendix D for a list of spares and options.

Distributed in North America by Fume Hood Certified, LLC | www.fumehoodcertified.com | (623) 226-8260

4.0 INSTALLATION REQUIREMENTS

This section explains the installation requirements for the Q200 before use.

4.1 REMOVING THE CASE LID

Before the instrument is operated, the user may wish to remove the lid of the case and store in a safe place, as illustrated in Figure 2:

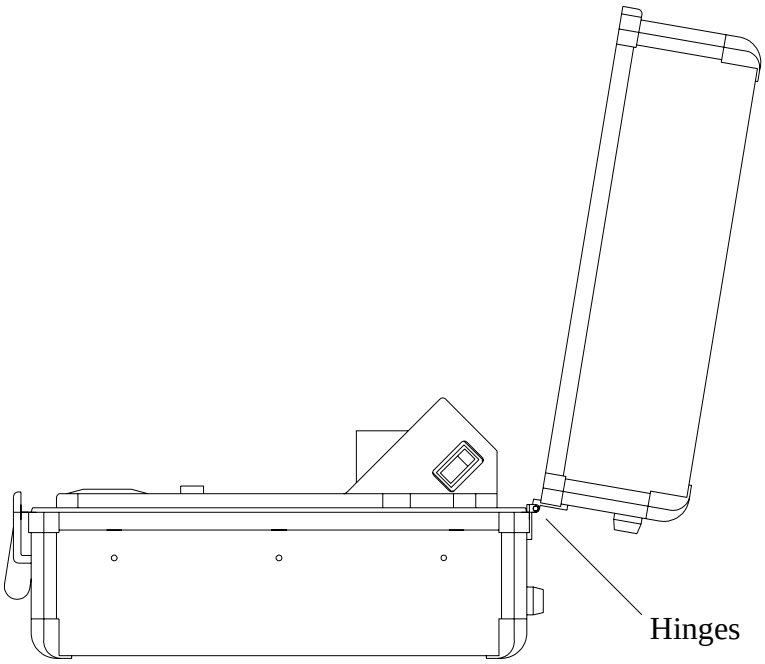

Figure 2 Removing the Case Lid

To remove the case lid, unlock the case, release the buckles on the front of the case and raise the lid. Whilst holding the case lid, slide the lid to the left, this will detach the lid from the base of the case.

4.2 GAS SUPPLY

A supply of clean, dry, Argon gas of at least 99.998% purity is required to enable the instrument to function to its specification. It is essential to the function of the Electron Capture Detector, that impurities in the Argon supply do not exceed the following concentrations:

- Total Halogen (Cl, Fl, I, Br) 1ppb (1 in 10^{9})
- Total Hydrocarbon 50 ppm
- Total Oxygen 10 ppm
- Water 50 ppm

Distributed in North America by Fume Hood Certified, LLC | www.fumehoodcertified.com | (623) 226-8260

4.3 POWER SUPPLY

The instrument can operate from the internal 12V battery or via the external battery charger supplied with the instrument. The battery charger enables the user to charge the internal battery or to power the instrument independently. When external power is connected in this way, the instrument can be used with the battery fitted or removed.

If the instrument is to be used in an environment where it is inconvenient or not possible to run the instrument with the charger connected and where, for operational reasons, long recharging times cannot be accommodated, a spare battery may be purchased. It is then possible to maintain one battery fully charged using the standard battery charger and cable and the battery charger adapter supplied with the instrument. This will allow the minimum of down time while exchanging the fully charged battery for the battery within the instrument, which may then be charged remotely while the instrument remains operational. Removal and replacement of the battery is described in Appendix H.

> The battery charger is designed for use on a flat surface adjacent to the instrument and with adequate clearance around the charger for ventilation. It should not be used whilst still located in the lid infill. Be aware that the internal 12-Volt battery is protected with a T2A/250V inline fuse.

The battery is disconnected for shipping purposes. To reconnect the battery, refer to Appendix H.

4.4 STORAGE AND OPERATING ENVIRONMENT

So the instrument performs to its published specification the user should ensure that the instrument is stored and operated in the following environment:

- 5°C to 45°C.
- A location away from moisture, strong draughts, explosive compounds, solvents, intense heat and large concentrations of the trace gas being detected.

4.5 OPERATING MODES

The instrument can be operated in either a portable mode, where the instrument can be transported to different locations and environments or a fixed mode, where the instrument is installed at a fixed site.

4.5.1 PORTABLE INSTALLATION

Before operating the instrument in this mode the user should ensure that there is an adequate supply of Argon and the battery is sufficiently charged to perform all leak-checking duties.

Distributed in North America by Fume Hood Certified, LLC | www.fumehoodcertified.com | (623) 226-8260

4.5.1.1 CHECKING THE INTERNAL ARGON SUPPLY

To check the internal gas supply simply turn the internal gas cylinder on by moving the gas bottle handle to the left. The gas bottle handle is accessible through an aperture in the console when the handgun is removed from its holder. The pressure gauge on the regulator, which is visible through an aperture to the right of the gas bottle handle, should be examined to ensure there is a sufficient gas supply to perform leak-checking duties. A pressure of 150 bar will give approximately 20 hours of continuous use. When the pressure falls below 10 bar (145 PSIG) the instrument becomes non-operational. If there is insufficient Argon available in the internal cylinder, change the internal cylinder by following the procedure laid out in Appendix G.

Remember to turn the gas supply off by moving the gas bottle handle to the right when the instrument is not in use.

4.5.1.2 CHECKING THE BATTERY

The battery voltage may be checked by entering the 'Diagnostics' menu as described in Section 8.3.

Running the instrument while charging the battery over a 16-hour period recharges the battery adequately for a further 8 hours of portable operation. However this is not recommended as a regular mode of operation as the battery capacity will be slowly eroded. Running the instrument in the detector clean mode while charging is also possible but a 24-hour charge is recommended in this case. To recharge the battery:

- Plug the battery charger jack in to the battery charger connector, marked  and located to the rear of the console. Push the battery charger connector down and turn clockwise to secure.
- Connect the charger to the mains supply using the lead supplied.
- Switch on the mains supply. The green light on the front of the battery charger indicates when the charger is powered. The green indicator on the instrument's console front panel (○ ) indicates that the battery, if fitted, is being charged.

4.5.2 FIXED INSTALLATION

In this mode it is recommended that the instrument be run from a large external gas cylinder with the battery charger connected to the mains supply and switched on permanently. This will have the effect of extending the gas supply and the battery, if fitted, will be maintained in a fully charged state.

4.5.2.1 RUNNING FROM AN EXTERNAL GAS SUPPLY

In most cases the internal 600cm^3 gas cylinder is left connected. If the internal gas cylinder is to be removed, (see Appendix G for more details), then a regulator blanking plug must be connected in place of the internal cylinder before connecting an external gas supply. Appendix D contains details of regulator blanking plugs.

The following procedure should be observed when connecting the instrument to an external gas supply:

Distributed in North America by Fume Hood Certified, LLC | www.fumehoodcertified.com | (623) 226-8260

- The external gas cylinder should be sited as close as possible to the instrument and clamped to a bench or other rigid structure to avoid the possibility of injury caused by the external gas cylinder toppling over.

- The internal cylinder may remain in place but should be turned off. The instrument may be run without an internal cylinder fitted however in this case a regulator blanking plug must be obtained from the supplier, and fitted securely to the internal cylinder connection.

- Connect a clean regulator to the external gas cylinder and use nylon tubing to connect it to the instruments external gas connector, using the hose connector from the spare's box.

- Turn on the external gas supply and set the regulator head to give a pressure of 3 to 4 bar.

- The configuration parameter gas supply must be set to external; this has the effect of disabling the low gas warning. See section 8 for details of how to program the instrument.

4.5.2.2 RUNNING FROM THE EXTERNAL POWER SUPPLY

The external power is supplied via the mains operated charging unit. When connected, the charger will supply 12V DC via the internal battery. When the console is switched off with the charger still connected to the instrument and mains power supplied to the charger, the internal battery is recharged. When the console is switched on with the charger still connected, the instrument will be powered, but recharging of the internal battery will take place at a reduced rate.

If the internal battery requires recharging, it is recommended that the instrument be switched off, with the battery charger connected, for a period of not less than eight hours. To recharge the battery fully, turn off the instrument, connect the battery charger as detailed in section 4.5.1.2 and leave on charge for 16 hours. Running the instrument for an 8-hour day from the battery and charging for 16 hours overnight will maintain the battery in a fully charged state.

Distributed in North America by Fume Hood Certified, LLC | www.fumehoodcertified.com | (623) 226-8260

5.0 CONSOLE FAMILIARISATION

This section familiarises the user with the instruments console and front panel interface.

5.1 FRONT PANEL LAYOUT

The instrument front panel consists of an eleven key panel, key-switch, battery charger indicator and twenty-character display as illustrated in Figure 3.

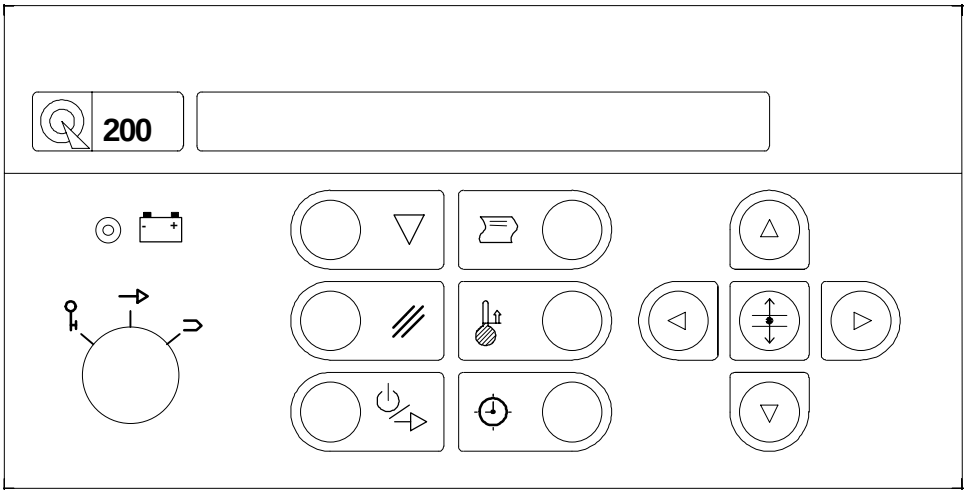

Figure 3: Front Panel Layout

5.1.1 KEY-SWITCH ORIENTATION

The key-switch has the following orientation:



Run (key removed): The user can make measurements, select standby mode clean the detector, zero the display, select peak hold on and off, display the time and date, cancel warning messages, print stored results and clear the storage buffer.



Run (key inserted): Same as run except the user can gain access to program mode by turning the key-switch to the program position (fully clockwise).



Program (key inserted): In program mode the user can alter the program parameters.

Distributed in North America by Fume Hood Certified, LLC | www.fumehoodcertified.com | (623) 226-8260

5.1.2 FRONT PANEL KEYS

Each key on the front panel performs a different function, a description of which follows:



Calibrate: If pressed in program mode the instrument will enter the calibration sequence.



Clean: If pressed the instrument will clean the detector by elevating the detector temperature to 110°C. The detector will remain at this elevated temperature for the period defined by the 'Clean Time' parameter in the configuration menu (see section 8 for details).



Print: If this key is pressed and a printer is connected and is on-line, any readings that have been stored will be printed.



Standby/Sample: This key is pressed to toggle the instrument between 'standby' and 'sample' modes, whilst the key switch is in the or positions.



Cancel: If pressed whilst a program parameter is being displayed, then that parameter will be reset to its default setting. This key also cancels errors and exits functions such as the clean facility.



Clock Edit: This key is used to either set the date or time, if setting the date or time or to display the current date and time.



Scroll Left: If pressed in program mode the user will move backwards within the program structure.



Scroll Right: If pressed in program mode the user will move forwards within the program structure.



Increment: If pressed in program mode the user can increment the currently selected program parameter. If pressed in either sample mode the user can increase the audio output volume.



Decrement: If pressed in program mode the user can decrement the currently selected program parameter. If pressed in either run or calibrate mode the user can reduce the audio output volume.



Select: Press to enter and exit the menu system.

5.1.3 BATTERY CHARGER INDICATOR

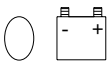

Battery charger LED: Lights when the battery charger is connected and mains power is supplied to the battery charger.

Distributed in North America by Fume Hood Certified, LLC | www.fumehoodcertified.com | (623) 226-8260

6.0 HAND UNIT FAMILIARISATION

The instrument hand unit consists of a rugged case. This houses a sample probe, detector with amplifier, pump, ten segment LED bar graph display, three key switch panel and two LED indicators, as illustrated in Figure 4. A service cable connects the hand unit with the gas supply and console electronics.

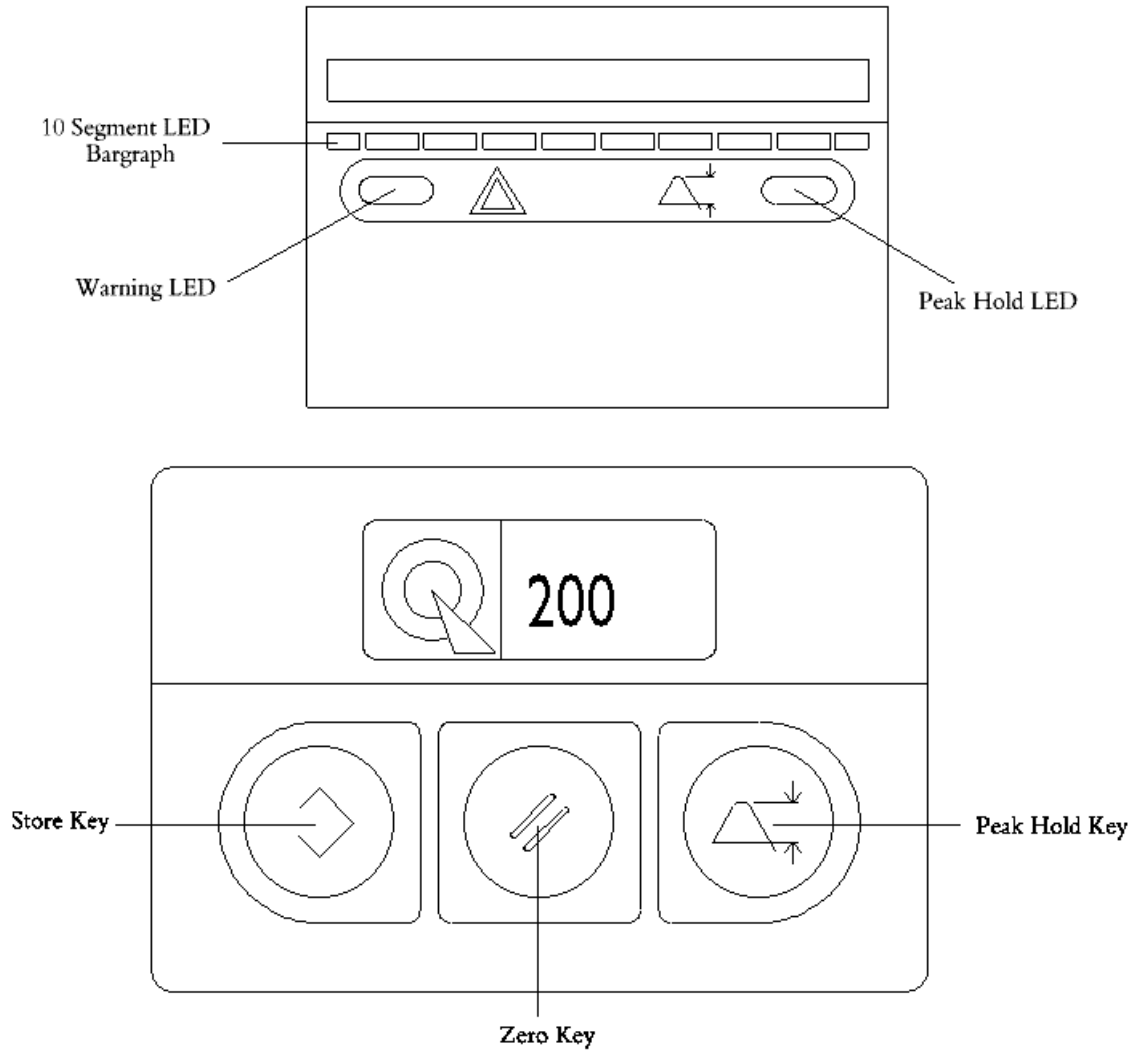

Figure 4: Hand Unit Display and Keyboard

Distributed in North America by Fume Hood Certified, LLC | www.fumehoodcertified.com | (623) 226-8260

6.1 HAND UNIT KEYS

Each key on the hand unit performs a different function, a description of which follows:

Store: When pressed in sample mode the currently displayed reading is stored in memory.

Zero: If this key is pressed in sample mode, the instrument will take the reading at that instant as the new background reading. This will cause all ten elements on the hand unit bar graph display to be extinguished; the audio to be reset and the console display will read the minimum leak rate applicable to the current instrument configuration. If pressed whilst the 'Reset Parameters Yes' message is being displayed, then the instrument will reset all it's parameters to their default values.

Peak Hold: When pressed, all subsequent readings will be subjected to the Peak Hold function. This function monitors the peak (highest) reading taken since the last zero was performed. When enabled the audio is still free running enabling the leak site to be located. Pressing the key a second time will disable this function.

6.2 HAND UNIT INDICATORS

The hand unit of the instrument contains two indicators in the form of Light Emitting Diodes (LED's).

6.2.1 WARNING LED

The Warning LED ( ) is a red LED that will be illuminated when there is an operational problem with the instrument, this will be accompanied by an audible warning tone. See Appendix C for further details. It is also illuminated in program and standby mode to indicate the instrument is not ready to use.

6.2.2 PEAK HOLD LED

The peak hold LED ( ) is a green LED that will be illuminated whenever peak hold is selected, and extinguished whenever peak hold is de-selected.

6.3 HAND UNIT BAR GRAPH DISPLAY

The hand unit on the instrument uses a ten segment LED bar graph to represent the current leak rate with respect to the alarm or calibration level.

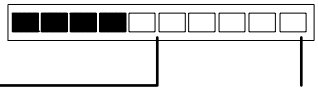

Midpoint equivalent to the Alarm or Calibration level

Full Scale Equivalent to 10x the Alarm or Calibration Level

Distributed in North America by Fume Hood Certified, LLC | www.fumehoodcertified.com | (623) 226-8260

The midpoint on the hand unit bar graph represents the alarm or calibration level, with the alarm level taking precedence if both are set. When the user is sampling and a leak is present, the audio will build until the midpoint is reached, then a two-tone signal will be emitted to indicate that the alarm level has been exceeded (this will not happen if only the calibration level has been set).

Distributed in North America by Fume Hood Certified, LLC | www.fumehoodcertified.com | (623) 226-8260

7.0 POWER UP AND INSTALLATION

This section will describe how to switch the instrument on, and the initialisation routine that follows.

This manual is written specifically for an instrument configured to SF_6, H Sinter, ml/sec and an English agent. Instruments configured for other gases and units will perform identically except that some display formats are different, and the range and step sizes for calibration and alarm levels are different. The user may convert between leak rates in different units by referring to Appendix J.

7.1 SWITCH ON

When switching the instrument on, the following procedure should be observed:

- Remove the hand unit from its holder.
- Turn on the gas supply by turning the gas bottle handle to the left, or turn on the external gas supply.
- Switch the instrument on via the on/off rocker switch, located in a recessed aperture on the top right side of the raised portion of the console housing.

7.2 INSTALLATION

When the instrument is switched on the warning LED on the hand unit will light and the instrument will carry out self-check routines. These routines check that the instrument is of operational quality. If any faults, errors or warnings occur refer to Appendix C for help. If a printer is connected the agent's address will be printed; an example of which is shown below:

```
------------------------------------------
     D-Industrial Technology Ltd
------------------------------------------
Room 504B, No. 650
Xinzhuan Road
Shanghai, China P.R.

Tel Number: +86 21 51095332
Fax Number: +86 21 51069290
E-Mail: info@d-industrial.com
Web Site: WWW.d-industrial.com

Version                200XXX/X.X

------------------------------------------
          System Ready
------------------------------------------
```


Distributed in North America by Fume Hood Certified, LLC | www.fumehoodcertified.com | (623) 226-8260

Note that, in the above printout, XXX represents the software language option and version.

Once the self-check routines are completed the instrument detector will be heated until it reaches its working temperature of 50°C, a process that takes approximately ten minutes. During this period the instrument's configuration sequence will be displayed, with a two-second delay between each display update:

****** Warming Up ******

Gas	**SF6**

Units	**ml/s**

Cal	**Off**

Al	**1.0x10-6ml/s**

Throughout the initialisation routine the hand unit warning LED is illuminated. The hand unit bar graph is used to indicate how much time is left before the instrument is operational (full scale being ten minutes).

Once the instruments' detector has reached its working temperature it will sound a two-tone audible signal then enter standby mode, if the key-switch is in either of the run positions the display will show:

Standby

If the key-switch is in the program position the display will show:

Calibrate

Distributed in North America by Fume Hood Certified, LLC | www.fumehoodcertified.com | (623) 226-8260

8.0 PROGRAMMING THE Q200

This section gives a detailed description of each program function and instructions for viewing and altering them. The instrument has a multi-layered menu structure. Appendix K details this structure, and can be used for reference when programming the instrument.

This manual is written specifically for an instrument configured to **SF_6**, ml/sec and an H Sinter. Instruments configured for other gases and units and inlet configurations will perform identically except that some display formats are different, and the range and step sizes for calibration and alarm levels are different. The user may convert between leak rates in different units by referring to Appendix J.

In program mode, four main menu categories are available to the user, they are:

- Calibrate
- Configure
- Diagnostics
- Set Date/Time

While in program mode the warning LED will be on to indicate the instrument is in program mode (except when calibrating). If the key is inserted in the key-switch and is set to the ⊃ position, then the first menu header will be displayed:

Calibrate

Using the ◁ or ▷ keys, the user can move backwards and forwards within the top level program structure. To enter a particular menu, the user must press the ⊜ key with the desired menu header being displayed. On pressing ⊜, the first parameter of the selected menu will be displayed. To scroll through the selected menu the ◁ and ▷ keys should be used. To reset a parameter to its default value, press the ⊘ key.

8.1 CALIBRATE MENU

The Calibrate menu contains three parameters, which are described in this section. To enter the Calibrate menu, the user must press the ⊜ key with the Calibrate menu header displayed. To scroll through the Calibrate menu use the ◁ ▷ keys, and to exit the Calibrate menu press ⊜.

8.1.1 CALIBRATION LEVEL

The first parameter in the 'Calibrate' menu is:

Cal 1.0x10-7ml/s

Distributed in North America by Fume Hood Certified, LLC | www.fumehoodcertified.com | (623) 226-8260

This parameter relates to the instrument's calibration level. The calibration level can be read from the standard leak certificate, provided with any standard leak from your supplier. The calibration level is the actual leak of trace gas coming from the leak rather than the bulk leak rate. For example, if a standard leak has a bulk leak rate of $1x10^{-4}$ ml/sec and has a 1% SF_6 in Nitrogen gas supply, the actual trace gas leak rate to be entered when calibrating to this leak is $1x10^{-6}$ ml/sec. ($1x10^{-4}$ x 1/100 ml/sec, bulk leak rate multiplied by SF_6 concentration in the gas supply). The standard leak used is usually equivalent to the required leak specification or alarm level.

Maximum Value	1.8×10^{-5} ml/s	
Minimum Value	1.0×10^{-8} ml/s	
Increment	1.0×10^{-8} to 1.0×10^{-5}	1.0×10^{-8} ml/s
	1.0×10^{-6} to 1.0×10^{-4}	0.1×10^{-e} ml/s
Default Value	Off	

The △ and ▽ keys are used to adjust this value until it matches that printed on the standard leak certificate, if a standard leak is being used.

When the M or L Sinters or the Capillary probe are fitted, the ranges over which the instrument may be calibrated are automatically changed to match the usable range of the instrument. Appendix A contains a full list of the operating, calibration and alarm ranges for all the inlet probes.

8.1.2 RE-CALIBRATION INTERVAL

This second parameter in the 'Calibrate' menu is:

Recal Off

This parameter relates to the re-calibration interval, which is the period between calibrations. The time set is in hours, and will be decremented once a calibration has been performed. The value is only decremented while the instrument is actually switched on. If however, the instrument is re-calibrated before the re-calibration interval has expired, then the re-calibration interval will be reset to the value entered by the user, and decrementing of this interval will resume when re-calibration is complete.

Maximum Value	48 Hours
Minimum Value	Off
Increment	4 Hour Steps
Default Value	Off

If the re-calibration interval is exceeded, the warning LED on the hand unit will illuminate (it will already be on in program mode), the periodic audible warning will sound, and the following warning will be displayed:

Warn: Cal Due

This warning will continue to be displayed until the ⊘ key is pressed to clear the warning. The warning LED will stay on until the user re-calibrates the instrument. See Section 9 for further details on how to calibrate the instrument.

Distributed in North America by Fume Hood Certified, LLC | www.fumehoodcertified.com | (623) 226-8260

8.1.3 CALIBRATION FACTOR

The third parameter in the 'Calibrate' menu is:

Cal Factor 1.000

The calibration factor is automatically calculated during the calibration routine and applied to all subsequent readings taken in the sample mode. The purpose of the calibration factor is to compensate for minor variations in the performance of the instrument between calibrations. The calibration factor cannot be changed by the user but can be reset to its default value by pressing the ⓔ key.

Maximum Value	3.000
Minimum Value	0.300
Default Value	1.000

8.2 CONFIGURE MENU

The Configure menu contains seven parameters, which are described in this section. To enter the Configure menu, the user must press the ⓜ key with the Configure menu header displayed. To move through the Configure menu use the ◁ ▷ keys, and to exit the Configure menu press ⓜ.

8.2.1 CLEAN TIME

The first parameter in the 'Configure' menu is:

Clean Time 1:00 H:M

This parameter relates to the time for which the detector is held at its cleaning temperature of 110°C, when the ⓘ key is pressed. The recommended cleaning period for the instrument is one hour for mild contamination. This value can be adjusted using the △ and ▽ keys. A time should be set that is sufficient to 'burn off' the contamination to which the instrument has been subjected. It is advisable to perform a cleaning cycle of one hour if the inlet configuration has been changed either to modify the operating range of the instrument or for service purposes. This will ensure that the inlet of the instrument is clean prior to the re-calibration that will be necessary after a change in inlet configuration.

Maximum Value	16 Hours
Minimum Value	10 Minutes
Increment	10 Minutes
Default Value	1 Hour

8.2.2 ALARM LEVEL

The second parameter in the 'Configure' menu is:

Al 1.0x10-7ml/s

Distributed in North America by Fume Hood Certified, LLC | www.fumehoodcertified.com | (623) 226-8260

Using the △ and ▽ keys, the alarm level can be adjusted to the required value. If the alarm level is set then it will always be used in preference to the calibration level as the midpoint on the bar graph display on the hand unit. The alarm level would normally be set to the pass/fail leak specification of the unit under test.

Maximum Value	1.8×10^{-5} ml/s	
Minimum Value	1.0×10^{-8} ml/s	
Increment	1.0×10^{-8} to 1.0×10^{-5}	1.0×10^{-8} ml/s
	1.0×10^{-6} to 1.0×10^{-4}	0.1×10^{-e} ml/s
Default Value	Off	

When the M or L Sinters or the Capillary probe are fitted, the ranges over which the alarm level may be set are automatically changed to match the usable range of the instrument. Appendix A contains a full list of the operating, calibration and alarm ranges for all the inlet probes.

The alarm level also sets the point at which the audio output, that rises in pitch as the detected leak rate increases, changes to a two-tone audible warning that the alarm level has been exceeded. The rate at which the pitch of the audio output increases is scaled to the alarm level and the maximum frequency that the audio output attains is independent of the alarm level set. If no alarm level is set, the audio output is scaled to the calibration level but, in this case, no two-tone warning is given.

When results are printed, the alarm level sets the criterion for printing Pass or Fail against individual results.

8.2.3 TRACE GAS CONCENTRATION

The third parameter in the 'Configure' menu is:

Trace Gas % 100%

This parameter relates to the trace gas concentration contained within the component under test. Using the △ and ▽ keys, the concentration can be adjusted to the required value. The displayed leak rate is then automatically corrected to reflect the actual bulk leak rate from the unit under test.

From a practical viewpoint it is best to use the lowest trace gas concentration that is appropriate for the task to be performed. There are a number of benefits that result from this approach. Firstly, a low trace gas concentration helps to limit the increase in SF_6 background as leak testing is performed, particularly if a gross leaking component is encountered. Secondly, the Q200 may be used with an H (or M) sinter to obtain the required sensitivity which will be beneficial in terms of response and clear-down times, The L sinter having response and clear-down times that are worse than the M sinter by about a factor of ten. Thirdly, there is a benefit in terms of the reduction in cost of the trace gas that is consumed during testing. Appendix A contains tables showing the usable range of the instrument for the various inlet configurations over a range of trace gas concentrations.

Maximum Value	100%
Minimum Value	0.1%

Distributed in North America by Fume Hood Certified, LLC | www.fumehoodcertified.com | (623) 226-8260

Increment	0.1% to 1% in 0.1% steps 1% to 100% in 1% steps
Default Value	100%

8.2.4 AUTO ZERO

The fourth parameter in the 'Configure' menu is:

Auto Zero Off

Using the △ and ▽ keys this parameter can be adjusted to the required setting. If the auto zero is set to either slow, medium or fast then all readings taken by the instrument will be subjected to the auto zero algorithm. This algorithm is used to 'track out' background frequency drift due to varying background contamination.

Maximum Value	Fast
Minimum Value	Off
Increment	Off to Slow to Medium to Fast
Default Value	Off

8.2.5 DISPLAY TYPE

The fifth parameter in the 'Configure' menu is:

Display Auto

This parameter sets the manner in which leak rate information is presented on the digital display on the console of the instrument. Using the △ and ▽ keys this parameter can be adjusted to present the information in a manner that is best suited for interpretation by the operator.

Maximum Value	$x10^{-5}$
Minimum Value	$x10^{-8}$, Auto
Increment	Auto, $x10^{-8}$, $x10^{-7}$, $x\ 10^{-6}$, $x10^{-5}$
Default Value	Auto

When the display is set to Auto, the display will have the following format:

SF6 9999x10-eml/s

Where **e** is the variable exponent.

When a fixed exponent option selected, all leak rate results are displayed according to that fixed exponent. Fixed exponent display options will have the following general formats:

SF6 9999x10-8ml/s

Distributed in North America by Fume Hood Certified, LLC | www.fumehoodcertified.com | (623) 226-8260

SF6 999.9x10-7ml/s

SF6 99.99x10-6ml/s

SF6 9.999x10-5ml/s

The Alarm and Calibration levels will be also displayed with the same format and will be scaled appropriately to reflect the trace gas concentration that has been set.

8.2.6 RESET PARAMETERS

The sixth parameter in the 'Configure' menu is:

Reset Parameters No

This parameter is used to reset all program mode parameters to their default settings. Using the △ and ▽ keys this parameter can be toggled between no and yes.

To clear the program mode parameters select the 'Yes' option and press the ⊘ key on the hand unit. The instrument will display:

Parameters Cleared

This message will be displayed for two seconds, to confirm that the parameters have been reset to their default settings.

Maximum Value	Yes
Minimum Value	No
Increment	No to Yes
Default Value	No

If only one program mode parameter needs resetting then the user should scroll to that parameter using the appropriate keys, and then press the ⊘ key on the console, to reset it to its default value.

8.2.7 GAS SUPPLY

The seventh parameter in the 'Configure' menu is:

Gas Supply Internal

Distributed in North America by Fume Hood Certified, LLC | www.fumehoodcertified.com | (623) 226-8260

This parameter is used to indicate whether the instrument's gas supply is internal or external. Using the △ and ▽ keys this parameter can be toggled between internal and external. If you are running from an external gas supply this parameter must be set to external otherwise the low gas warning will be displayed. When set to external the low gas warning is not active.

Maximum Value	External
Minimum Value	Internal
Increment	Internal to External
Default Value	Internal

8.3 DIAGNOSTICS MENU

The 'Diagnostics' menu contains five parameters that are described in this section. To enter the Diagnostics menu, the user must press the ⊕ key with the Diagnostics menu header displayed. To move through the Diagnostics menu use the ◁ ▷ keys, and to exit the Diagnostics menu press ⊕.

8.3.1 BATTERY VOLTAGE

The first parameter in the 'Diagnostics' menu is:

Battery 12.2Volts

This parameter indicates the current battery voltage of the instruments internal battery.

8.3.2 TEMPERATURE

The second parameter in the 'Diagnostics' menu is:

Temperature 48.9ºC

This parameter indicates the current detector temperature.

8.3.3 DETECTOR FREQUENCY

The third parameter in the 'Diagnostics' menu is:

Frequency 4.00kHz

Distributed in North America by Fume Hood Certified, LLC | www.fumehoodcertified.com | (623) 226-8260

The detector signal is a frequency that varies with the amount of trace gas entering the detector. With no trace gas entering the instrument and with a clean detector, a frequency of between 4 and 10 kHz should be displayed.

It is possible to toggle the internal pump on and off using the key. The frequency that is displayed with the pump on should be higher than the frequency displayed with the pump off, indicating that ambient air is being drawn into the detector cell.

Frequencies higher than 20kHz may produce Check Detector warnings under some circumstances. See Appendix C2.4 for more details.

8.3.4 RE-CALIBRATION

The fourth parameter in the 'Diagnostics' menu is:

Recal 0:50 H:M

This parameter displays the time remaining until a re-calibration will be requested. If no re-calibration interval has been set in the Calibration menu then this parameter will display:

Recal Off

8.3.5 SOFTWARE VERSION NUMBER

The fifth parameter in the 'Diagnostics' menu is:

Version: 200XXX/5.0

This parameter is the version number for the software that is fitted in the instrument, where XXX represents the language option. Its purpose is for quoting to the supplier in the event that there is a problem with the instrument.

8.4 SET DATE/TIME MENU

The 'Set Date/Time' menu contains two parameters and a further sub menu, which are described in this section. This menu contains parameters for setting up the instruments Real Time Clock. The Real Time Clock once set maintains the current date and time; it is used for date and time stamping of results when the key is pressed. These results may be printed by connecting a suitable printer, as described in section 11. To enter the Date/Time menu, the user must press the key with the Date/Time menu header displayed. To move through the 'Set Date/Time' menu use the keys, and to exit the menu press the key.

8.4.1 DATE

The first parameter in the 'Set Date Time' menu is:

Distributed in North America by Fume Hood Certified, LLC | www.fumehoodcertified.com | (623) 226-8260

Date 02/11/1999

Note that, for American language options, the date format will be presented as MM/DD/YYYY.

To change any of the 'Date' settings the user must first enter edit mode by pressing the ◎ key. To move throughout the 'Date' sub-menu use the ◁ ▷ keys. To exit the 'Date' sub-menu and accept the new settings press the ◎ key, to exit without changing any settings press the ⊕ key. When the user presses the ◎ key to exit the 'Date' sub-menu a confirmation message will be displayed for two seconds. This message confirms that the Real Time Clock has been updated.

Date Set

If on pressing the ◎ key the date entered is invalid **e.g.** 31/02/1999 an error message will be displayed for two seconds and the Real Time Clock will not be updated.

8.4.1.1 DAY

The first parameter in the 'Date' sub-menu is:

Day 09

Using the △ and ▽ keys this value can be adjusted to reflect the current day of the month.

Maximum Value	31
Minimum Value	01
Increment	01
Default Value	01

8.4.1.2 MONTH

The second parameter in the 'Date' sub-menu is:

Month 11

Using the △ and ▽ keys this value can be adjusted to reflect the current month of the year.

Maximum Value	12
Minimum Value	01
Increment	01
Default Value	01

8.4.1.3 YEAR

The third parameter in the 'Date' sub-menu is:

Year 1999

Distributed in North America by Fume Hood Certified, LLC | www.fumehoodcertified.com | (623) 226-8260

Using the △ and ▽ keys this value can be adjusted to reflect the current year.

Maximum Value	2050
Minimum Value	1998
Increment	01
Default Value	1998

8.4.2 TIME

The second parameter in the 'Set Date Time' menu is:

Time 03:58

To change any of the Time settings the user must first enter edit mode by pressing the ◎ key.

To move throughout the 'Time' sub-menu use the ◁ ▷ keys, and to exit the 'Time' sub-menu and accept the new settings press ◎ key, to exit without changing any settings press the ⊕ key. When the user exits the 'Time' sub-menu a confirmation message will be displayed for two seconds. This message confirms that the Real Time Clock has been updated.

Time Set

8.4.2.1 HOURS

The first parameter in the 'Time' sub-menu is:

Hours 03

Using the △ and ▽ keys this value can be adjusted to reflect the current hour of the day.

Maximum Value	23
Minimum Value	00
Increment	01
Default Value	01

8.4.2.2 MINUTES

The second parameter in the 'Time' sub-menu is:

Minutes 15

Using the △ and ▽ keys this value can be adjusted to reflect the current minute of the hour.

Maximum Value	59
Minimum Value	00
Increment	01
Default Value	01

Distributed in North America by Fume Hood Certified, LLC | www.fumehoodcertified.com | (623) 226-8260

8.5 EXITING THE MENU STRUCTURE

Any of the menus mentioned in Section 11 can be exited by moving the key-switch to → or ↓, which will cause the instrument to enter standby mode.

Distributed in North America by Fume Hood Certified, LLC | www.fumehoodcertified.com | (623) 226-8260

9.0 CALIBRATING THE Q200

It is possible to operate the Q200 without calibrating the instrument (that is with the Calibration Factor set to the default value of 1.000). In order to make accurate measurements of leak rate or concentration with the Q200, it must be calibrated against a standard leak or gas of known composition. Calibration should be carried out each time the instrument is operated for the first time, then usually every 8 hours or more frequently if required.

From the calibration routine the instrument will calculate a calibration factor. The calibration factor is the ratio by which the actual measurement of leak rate obtained from a standard leak differs from notional measurement of a leak of the same value that is stored within the software of the instrument. This factor will be applied to all subsequent readings taken in sample mode. This factor enables the instrument to accurately measure leaks using the standard leak used during calibration as a reference. The magnitude of the calibration factor can be examined after calibrating in the 'Calibrate' menu, as described in section 8.1.3.

The calibration routine is initiated by pressing the ⓥ key on the console whilst in program mode. Entering the program mode will cause the warning LED to be illuminated. If the user has not set a calibration level then the display will read:

No Cal Leakrate Set

This message will be displayed for two seconds before the display returns to 'Calibrate' and the user will not be able to calibrate the instrument until a calibration level is set. If a calibration level is set the display will show:

Stabilising 50.0ºC

This message is displayed for ten seconds. This ten second delay is to allow the detector signal to settle to a steady state. The warning LED will be extinguished and the display will show:

Sample Background

Ensure that the probe is sampling a clean background and press the ⊘ key on the hand unit, this has the effect of taking the detector signal at that instant as the background signal. The display will show:

Offer Probe To Leak

This prompts the user to insert the hand unit probe in to the standard leak nozzle cone. Once in place the user should press the ⊘ key on the hand unit, the display will show:

Wait

This message is displayed for ten seconds before readings are taken. This ten-second delay is required to allow the flow of sample gas drawn from the standard leak to

Distributed in North America by Fume Hood Certified, LLC | www.fumehoodcertified.com | (623) 226-8260

achieve a steady state, once the probe has been inserted into the cone on the standard leak.

The calibration routine is now under way and the instrument display will reflect the magnitude of the standard leak. When the calibration routine is entered the peak hold function is automatically selected, confirmed by the peak hold LED ( ) on the hand unit being illuminated. This function can be de-selected by the user if required by simply pressing the key, at this instant the peak hold LED is extinguished.

When the user obtains a steady peak reading on the display the key should be pressed to accept the calibrated level. At this point the instrument calculates the calibration factor. If all is well an audible two tone signal will be given, with a display message, to indicate calibration was successful before reverting to its previous state before the key was pressed with the warning LED illuminated.

Valid Calibration

If the calibration leak rate entered in the 'Calibrate' menu varies greatly from the response measured during calibration with a resulting calibration factor that lies outside the range 0.3 to 3.0, the console will display:

Error: Invalid Cal

The calibration factor will remain unchanged from the value prior to the latest attempt to perform a calibration. To clear the error, press the key. If this warning occurs, the user should check that the calibration leak rate set in the instrument is the same as that printed on the standard leak certificate, otherwise refer to Appendix C for other possible remedies.
Since an invalid cal error leaves the calibration factor unchanged, it is possible to continue leak checking. However, entering the sample mode from standby by pressing the key, the instrument will display a 'Warn: Not calibrated ' message to remind the user that the instrument is being used in a manner where the results obtained may not be reliable.

Distributed in North America by Fume Hood Certified, LLC | www.fumehoodcertified.com | (623) 226-8260

10.0 THE Q200 IN USE

This section gives instruction on how to make measurements with the Q200. Before the user takes measurements with the instrument, the following points should be checked:

- The instrument has been configured appropriately for the range over which the instrument is to be used for the test that is to be performed.
- The instrument has been calibrated to a standard leak appropriate to the specification of the unit under test.
- The concentration of trace gas in the unit under test has been entered into the instrument; see Section 8 for more details.
- If required, the instrument has been programmed to alarm at a leak rate appropriate to the specification of the unit under test.

10.1 STANDBY MODE

When the instrument is powered up and the initialisation routine has been completed, the display will show:

Standby

The instrument should be put into standby mode if it is not going to be used for five minutes or more. While in standby mode the warning LED will be lit to indicate the instrument is not ready to use. In this mode the display illumination is reduced saving battery life, and the pump is switched off to avoid potential contamination to the detector. If the user wants to enter sample mode the ⊚ key should be pressed, at this point the warning LED will be switched off (if no errors or warnings have occurred).

10.2 SAMPLE MODE

After the ⊚ key is pressed, the display will show:

Stabilising 50.0ºC

This message is displayed until the detector is in an operational state; this will be a minimum of ten seconds. The display will show:

SF6 0.0x10-8ml/s

Sampling with the instrument can now commence. The manner in which the instrument is used will invariably depend on the component under test.

Distributed in North America by Fume Hood Certified, LLC | www.fumehoodcertified.com | (623) 226-8260

10.3 **INSTRUMENT CALIBRATION**

In order to obtain accurate and reproducible performance from the Q200, the manner in which the instrument is calibrated is of the greatest importance. There are a few general rules that should be borne in mind when performing instrument calibrations:

- When starting from cold, that is, the instrument has been switched off with the argon flow turned off for some time, for example if the instrument has been left off overnight, the instrument should be allowed to warm up thoroughly to allow the operation of the instrument to stabilise. A period of not less than thirty minutes is a suitable period, preferably with the pump on.

- Where the instrument is in continuous use, calibrations can be performed as operational requirements or convenience dictates.

- The area in which the calibration is to be performed must have a low background level of SF_6 in comparison with the level at which the instrument is to be calibrated. The background level becomes increasingly important as the calibration level decreases. There are two simple methods of checking the SF_6 background; the one that is used will depend on individual circumstances:

  The first method requires the instrument to be removed to an area where clean ambient air can be guaranteed. The easiest way of fulfilling this requirement is to take the instrument outside.

  The second method is appropriate if the instrument is used in an essentially fixed installation; a supply of clean air can be derived from a compressed air cylinder with a regulator or from a compressed air supply. If a compressed air supply is used, special care must be taken to ensure that the air supplied to the instrument is free of both compressor oil mist and water vapour. The presence of either of these contaminants in the clean air supply will have a deleterious effect on the performance of the instrument. The air supply should be arranged to flow at a rate of a few tens of cc/second into a shroud that is a loose fit over the inlet probe of the instrument. The empty barrel of a 50cc plastic syringe makes a convenient, cheap and disposable shroud.

  Set the instrument to the sample mode with the inlet probe in the supply of clean air. Allow the instrument to stabilise and zero the instrument. Return the instrument to the area where the calibration is to be performed without setting the standby mode or performing another zero. Any positive indication on the display will give a measure of the SF_6 background either in leak rate or concentration units, depending on configuration.

  If the background reading is a significant proportion of the calibration level, say 10% or higher, measures should be taken to reduce the background, for example, temporarily increasing the ventilation rate.

- When calibrations are performed using standard leaks, turn the standard leak on and remove the blanking cap from the leak face prior to the commencement of the calibration procedure in order to allow the flow from the leak to stabilise at the calibrated value.

Distributed in North America by Fume Hood Certified, LLC | www.fumehoodcertified.com | (623) 226-8260

Ensure that the calibration is performed in a draught free environment.

During calibration using a standard leak, the assumption that is made is that the inlet probe of the Q200 scavenges all of the gas that emerges from the face of the leak. This assumption is valid in draught free environments because the rate of evolution of gas from the leak is a very small fraction of a cubic centimetre per second whereas the probe flow on the instrument is 60cc/minute.

It is possible to test for the presence or absence of draughts during calibration by turning off the peak hold function and observing the console display. Although the display may not indicate the value of the standard leak because the instrument is being calibrated, the reading on the display should be steady. Any marked variations in the console display can indicate that a draught may be affecting the calibration routine and steps should be taken to remedy the situation.

- When calibrations are performed using standard gas mixtures, it is important to ensure that the concentration of calibration mixture in the vessel from which the gas is sampled is representative of the bulk calibration mixture. This may involve extensive flushing of the vessel to ensure that this condition is met.

  It is possible to check that the concentration of the gas in the vessel is representative of the bulk calibration gas by performing sequential calibrations and examining the calibration factor after each calibration and flushing the vessel between the calibrations. Any decrease in the calibration factor calculated by the instrument indicates that the concentration in the vessel is rising and it has not been adequately purged. Vessel purging and calibration cycles should be continued until the calibration factor reaches a constant value.

- It has always been possible to perform calibrations in the concentration mode (results displayed in ppm) using standard leaks (leak rate given in cc/sec). Calculate the equivalent concentration for that leak rate by dividing the leak rate of the standard leak in cc/sec by the inlet probe flow rate in cc/sec.

  This procedure has been made easier by setting the probe flow to 60 cc/min or 1cc/sec. If the calculation outlined above is performed for a typical range of Standard leaks, the following results for an instrument fitted with an H sinter are obtained:

Standard Leak Rate / cc/sec	Equivalent Concentration / ppm
$1.0x10^{-8}$	0.01
$1.0x10^{-7}$	0.10
$1.0x10^{-6}$	1.00
$1.0x10^{-5}$	10.0

  The validity of calibrating the instrument for ppm measurements using standard leaks has been demonstrated and this approach can avoid some of the pitfalls that may trap the unwary if a standard gas mixture is used to perform ppm level calibrations.

10.4 GENERAL TIPS ON LEAK DETECTION

The following general tips will prevent improper readings in the majority of applications:

Distributed in North America by Fume Hood Certified, LLC | www.fumehoodcertified.com | (623) 226-8260

- The operating configuration of the instrument should be chosen so that, so far as is possible, the readings of greatest interest (usually around the pass/fail level of the component under test) are in the middle of the configured operating range. This will not be possible in all cases, especially if the maximum sensitivity is required from the instrument, but it is good practise to try to operate the instrument in such a manner as to allow measurements both above and below those of most interest to be made.

  The operational range of the instrument can be varied over wide limits by appropriate choice of inlet configuration and trace gas concentration. Appendix A gives a list of the operating ranges of the instrument with the various inlet configurations at a range of trace gas concentrations.

  By and large it is better to modify the operating range of the instrument by changing the trace gas concentration rather than by changing the inlet. The H sinter is the first choice inlet with the M and L sinters being second and third choices respectively. Note that the L sinter, although offering the ability to detect high level leaks, has a comparatively poor response and clear-down time and should only be used with caution.

- In some applications a total integrated leak rate is required from a component under test. This type of test is performed when the pass/fail criterion is that the total leak rate from all the potential leak sites in the component under test does exceed a specified figure.

  In outline, the component to be tested is placed inside a chamber that is purged with clean air to remove any SF_6 background and is then sealed. The sealed chamber is allowed to stand for a specified period of time to allow the concentration of SF_6 to build up in the space within the chamber surrounding the item under test. The concentration of SF_6 in this space is measured using the Q200 and a calculation may be performed to convert this concentration into leak rate units. If the incubation time is kept constant, the pass/fail level can be defined in terms of concentration units, rather than calculating the equivalent leak rate.

  Although this is a commonly used technique, some care is required to ensure that the test is carried out in a manner that will ensure that reliable results are obtained. The majority of difficulties that are encountered when this technique is used are related to background levels of SF_6 and the operator not taking the appropriate steps to minimise their effects.

  In order to minimise the time that is required to produce a measurable concentration build up within the chamber, it is important to purge the chamber efficiently to minimise any SF_6 background in the chamber prior to sealing the chamber at the start of the test. The chamber background can result from a significant SF_6 background in the ambient air or from SF_6 left in the chamber from the previous test. The air supply that is used for this purging phase must be clean. If the air supply is derived from a compressor, it will be necessary to have oil and water traps in the supply line. This will ensure that there are no contaminants introduced into the test chamber that will have either an immediate or cumulative deleterious effect on the performance of the Q200.

  When a measurement of concentration is to be made, the way that the instrument is zeroed prior to making the measurement must be considered. It is important that the instrument is zeroed in an air sample that is representative of the composition of the air that was used to purge the chamber at the start of the incubation time. This

Distributed in North America by Fume Hood Certified, LLC | www.fumehoodcertified.com | (623) 226-8260

is the only way in which an accurate measurement of the increase in SF_6 concentration within the chamber can be made.

Firstly, consider the situation where the instrument is zeroed in an environment with an SF_6 background whose concentration is significant in comparison with the SF_6 concentration in the test chamber as a result of the incubation of a leaking test component. Having zeroed the instrument in a contaminated background, the instrument will only display a concentration increase when the air in the chamber is sampled if the SF_6 concentration in the chamber is higher than the SF_6 background in the air in which the instrument was zeroed. The displayed result will be the difference in SF_6 concentration between the chamber air and the air used to zero the instrument and will give a falsely low result.

Secondly, consider the situation where the instrument is zeroed in an environment with an SF_6 background whose concentration is high in comparison with the SF_6 concentration in the test chamber as a result of the incubation of a leaking test component. Having zeroed the instrument in a highly contaminated background, the instrument will display a zero result because the SF_6 concentration in the chamber is lower than the SF_6 concentration in which the instrument was zeroed. The actual concentration difference would be negative which has no sensible physical meaning in the context of the test.

Thirdly, consider the situation where the instrument is zeroed in an environment with an SF_6 background whose concentration is negligible in comparison with the SF_6 concentration in the test chamber as a result of the incubation of a leaking test component. Having zeroed the instrument in a clean background, the instrument will display a true result because the SF_6 concentration measured in the chamber results from the leaking component only.

In order to meet the requirement to arrange a supply of clean air in which the instrument can be zeroed, an approach similar to the clean air supply used when checking the SF_6 background in a fixed installation can be used. The air supply should be arranged to flow at a rate of a few tens of cc/second into a shroud that is a loose fit over the inlet probe of the instrument. The empty barrel of a 50cc plastic syringe makes a convenient, cheap and disposable shroud.

Having zeroed the instrument in clean air, the zero should not be touched again nor should the instrument be returned to the 'Standby' mode until the measurement of concentration build up within the chamber is complete. Setting the instrument to 'Standby' has the effect of cancelling the previous zero. A new zero point is found after the stabilisation period when re-entering the 'Run' mode which would not necessarily guarantee that the zero point would be that obtained when zeroing the instrument in clean air.

Adopting this approach will ensure that the measurements obtained are reliable.

- If the flexible probe is to be used to allow access to areas that are not accessible with the hand unit, ensure that the instrument is calibrated with this probe fitted. Note that the flexible probe can only be used with sinter inlets and that the response and clear down times will be poor with an L sinter fitted. Do not change probes when making measurements, as this will effect the quantitative response of the instrument.

- Leak testing should be carried out away from strong draughts and environments with high moisture content.

Distributed in North America by Fume Hood Certified, LLC | www.fumehoodcertified.com | (623) 226-8260

- Whilst sampling, the instrument should not be subjected to explosive compounds, high levels of organic solvent vapours, or large concentrations of the trace gas being detected. This will have the effect of contaminating the detector, therefore requiring a sustained period in clean mode.

- Avoid hand contact with the probe when leak testing, as this will lead to improper readings.

- Always ensure that the surface to be leak tested is relatively clean, and free from small deposits such as filings, etc.

- Under no circumstances should the probe be immersed in any type of liquid.

- Sampling should be performed with the probe a few millimetres above the surface under test, to avoid picking up dirt, oil, grease etc.

- The probe should be passed over the surface under test at a rate of not more than 25 mm/sec otherwise a small leak could be missed.

- Avoid placing heavy or sharp objects on the service cable that links the console to the hand unit.

- Store the Q200 under dry ambient conditions away from vapours, solvents and other volatile materials.

10.5 **ADJUSTING THE VOLUME**

The volume setting on the Q200 can be adjusted whilst in sample mode. If the user presses either the △ or ▽ keys the new volume level will be displayed:

Volume	**Medium**

This message will be displayed for a two-second period before reverting back to the leak rate display. The volume levels are off, low, medium and high and should be set in relation to the background noise level.

10.6 **BACKGROUND CONTAMINATION**

Ideally the instrument should be used in an environment that is free of any trace gas. Due to the possible presence of leaks from the unit under test, and because of the charging and discharging of components under test with trace gas there is likely to be some background contamination that the instrument cannot distinguish from a real leak.

In a relatively constant background, pressing the ⊘ key on the hand unit from time to time will be adequate to zero out any steady background and detector drift. Where the background contamination level is changing, however, the auto zero facility will give better performance as it automatically tracks any slowly changing background. Selection of the auto zero setting (slow, medium or fast) is best done by trial and error. It is best to work with the slowest setting possible. When the fast setting is selected care must be taken not to hold the probe close to a suspected leak for longer than a

Distributed in North America by Fume Hood Certified, LLC | www.fumehoodcertified.com | (623) 226-8260

few seconds, since the instrument will start to see this as background and zero it out. As a rough guide the time taken to reduce any change in background by 50% with the auto zero on is shown in the following table:

Auto Zero Setting	Time To 50% (Seconds)
Slow	40
Medium	15
Fast	5

10.7 RESULTS STORAGE AND PRINTOUT

The instrument can store up to 100 readings; these may then be printed to provide a hard copy for quality control purposes. To store and print readings the following procedure should be followed:

- It is wise to clear the storage buffer if using the instrument for the first time or for a specific purpose. To do this, enter sample mode and clear the storage buffer by pressing ⊙ and ⊘ keys simultaneously. If adding to any previous stored readings ignore this step.

- To store a result whilst measuring leaks press the ⊙ key, the display will read:

  Result Stored

  If on pressing the ⊙ key more than 100 results have been stored the display will show:

  Warn: Storage Buffer

  To clear the warning, press the ⊘ key. If the Storage Buffer Full message is cancelled, the warning LED will stay lit and the user will not be able to store any more readings until the buffer is cleared.

- To print out the stored results connect a printer to the RS232 port (see Section 11 for more information), then press the ⊘ key. An example of the result's printout is shown below:

Q200 Results

Gas	:	SF6
Trace gas %	:	100%
Units	:	ml/s
Al	:	1.0x10-6ml/s
Cal	:	1.0x10-6ml/s
Probe Type	:	H Sinter
Display	:	Auto

Block 1

Distributed in North America by Fume Hood Certified, LLC | www.fumehoodcertified.com | (623) 226-8260

10/11/1999 10:50 001 1.0x10-7ml/s Pass
10/11/1999 10:51 002 2.0x10-7ml/s Pass
10/11/1999 10:51 003 5.0x10-7ml/s Pass
10/11/1999 10:53 004 1.0x10-6ml/s Fail
10/11/1999 10:53 005 3.0x10-7ml/s Pass
10/11/1999 10:54 006 4.0x10-7ml/s Pass
10/11/1999 10:54 007 1.0x10-7ml/s Pass
10/11/1999 10:55 008 2.0x10-6ml/s Fail
10/11/1999 10:56 009 7.0x10-7ml/s Pass
10/11/1999 10:58 010 3.0x10-6ml/s Fail
10/11/1999 11:00 011 1.0x10-7ml/s Pass
10/11/1999 11:01 012 1.0x10-6ml/s Fail

Total 9.4x10-6ml/s

Pass 8 : 66.67%
Fail 4 : 33.33%
Total 12

It should be noted that if no alarm level were set, no pass/fail results would be printed as shown below:

Q200 Results

Gas : SF6
Trace gas % : 100%
Units : ml/s
Al : Off
Cal : 1.0x10-6ml/s
Probe Type : H Sinter
Display : Auto

Block 1

10/11/1999 11:57 001 1.0x10-7ml/s
10/11/1999 11:59 002 1.0x10-6ml/s
10/11/1999 12:00 003 3.0x10-7ml/s
10/11/1999 12:03 004 4.0x10-6ml/s
10/11/1999 12:03 005 6.0x10-7ml/s
10/11/1999 12:04 006 2.0x10-6ml/s

Total 8.0x10-6ml/s

- The parameter header is printed each time when either the trace gas %, alarm or calibrate levels are changed in order to allow the operator to track any changes in instrument settings that were made during the test.
- Results are retained in memory even when the instrument is turned off.

Distributed in North America by Fume Hood Certified, LLC | www.fumehoodcertified.com | (623) 226-8260

11.0 INTERFACING THE Q200

This section describes how the instrument can be connected to peripheral devices such as printers or chart recorders.

11.1 INTERFACING TO A PRINTER

Stored leak rate measurements (see Section 10 for details) may be printed out for hard copy and quality control purposes. A printer kit comprising a 40-column dot matrix printer, all cables and spare paper is available from your supplier (see Appendix D for ordering information). The printer is connected to the RS232 connector located on the rear of the raised potion of the console unit using the cable provided. The pin-outs for the RS232 connector are shown in Appendix E. The printer should be set up to match the instrument's communication protocol:

- 9600 baud
- 1 start bit
- 8-bit data
- 1 stop bit
- No parity

11.2 INTERFACING TO A CHART RECORDER

The instrument can be attached to an X-Y chart recorder, using the special analogue output cable (see Appendix D for ordering information). The cable should be plugged in to the RS232 connector, located on the rear of the raised portion of the console unit, and connected to the chart recorder analogue input using the spade terminals.

A 0 - 2 volt analogue output is generated representing the instantaneous leak rate being measured. It is scaled in the same way as the hand unit display so that the 50% point (1 volt) represents the alarm or calibration level, and full scale (2 volts) represents ten times this level.

Distributed in North America by Fume Hood Certified, LLC | www.fumehoodcertified.com | (623) 226-8260

Appendix A Q200 SPECIFICATION

This section gives a full specification for the Q200.

Detector		Miniature Electron Capture Detector.
Detects		Any Electron capturing gas. The unit is calibrated to display SF_6. Other freons and other halocarbons can be configured to special order.
Resolution		Dependant on Configuration. See Overleaf for Details.
Range		Dependant on Configuration. See Overleaf for Details.
Response Time	H Sinter	1 Second
	M Sinter	2 Seconds
	L Sinter	20 Seconds
Recovery Time	H Sinter	2 Seconds
	M Sinter	4 Seconds
	L Sinter	40 Seconds
Display		Direct Digital display of leak rate in ml/s or ppm. Bar graph display relative to alarm level or calibration level.
Alarm		Audio and visual warning if the leak rate sampled exceeds the set alarm level.
Calibration		Direct customer calibration, using optional standard leak.
Power Supply		AC mains supply 96-264V AC 50/60 Hz, 40VA. Instrument may only be run from earthed mains supply. 12V DC rechargeable lead acid battery, gel type giving 8 hours continuous use from full charge. Note protection afforded with T2A/250V inline fuse.
Gas Supply		Refillable internal 600 cm^3 cylinder of Argon of at least 99.998% purity, giving 20 hours continuous use when charged to 150 bar.
Interfaces		RS232 serial interface. 0-2 Volts analogue output.
Memory		Capacity of 100 test readings.
Dimensions		Case L430mm x B400mm x H230mm

Distributed in North America by Fume Hood Certified, LLC | www.fumehoodcertified.com | (623) 226-8260

Weight	Hand unit 1Kg, console 12 Kg, Shipping 15 Kg.
Operating Environment Temperature	5°C to 45°C.

Operating Ranges:

The instrument is factory configured to measure SF_6 and to display in either leak rate or concentration measurement units. Response to other gases may be available to special order. For conversion between different leak rate units and between leak rate and concentration, refer to the formulae in Appendix J.

When the M or L Sinters or the Capillary probe are fitted, the ranges over which the instrument may be calibrated are automatically changed to match the usable range of the instrument.

The following tables indicate the leak rate and concentration measurement; Calibration and Alarm ranges that are available for a range of specified Trace Gas concentrations.

Leak-Rate Measuring Ranges For 100% SF_6 / ml/s				
Probe Type	**Capillary**	**H Sinter**	**M Sinter**	**L Sinter**
Range	0.0×10^{-10} ⇓ 1.8×10^{-7}	0.0×10^{-8} ⇓ 1.8×10^{-5}	0.0×10^{-7} ⇓ 1.8×10^{-4}	0.0×10^{-6} ⇓ 1.8×10^{-3}
Calibration Level	1.0×10^{-10} ⇓ 1.8×10^{-7}	1.0×10^{-8} ⇓ 1.8×10^{-5}	1.0×10^{-7} ⇓ 1.8×10^{-4}	1.0×10^{-6} ⇓ 1.8×10^{-3}
Alarm Level	1.0×10^{-10} ⇓ 1.8×10^{-7}	1.0×10^{-8} ⇓ 1.8×10^{-5}	1.0×10^{-7} ⇓ 1.8×10^{-4}	1.0×10^{-6} ⇓ 1.8×10^{-3}
Config. Code	0001	0000	0002	0003

Concentration Measuring Ranges For 100% SF_6 / ppm				
Probe Type	**Capillary**	**H Sinter**	**M Sinter**	**L Sinter**
Range	N/A	0.00 ⇓ 18.09	0.0 ⇓ 180.9	0 ⇓ 1809
Calibration Level	N/A	0.01 ⇓ 18.00	0.1 ⇓ 180.0	1 ⇓ 1800
Alarm Level	N/A	0.01 ⇓ 18.00	0.1 ⇓ 180.0	1 ⇓ 1800
Config. Code	N/A	0100	0102	0103

Distributed in North America by Fume Hood Certified, LLC | www.fumehoodcertified.com | (623) 226-8260

Leak-Rate Measuring Ranges For 10% SF_6 / ml/s				
Probe Type	**Capillary**	**H Sinter**	**M Sinter**	**L Sinter**
Range	0.0×10^{-9} ⇓ 1.8×10^{-6}	0.0×10^{-7} ⇓ 1.8×10^{-4}	0.0×10^{-6} ⇓ 1.8×10^{-3}	0.0×10^{-5} ⇓ 1.8×10^{-2}
Calibration Level	1.0×10^{-10} ⇓ 1.8×10^{-7}	1.0×10^{-8} ⇓ 1.8×10^{-5}	1.0×10^{-7} ⇓ 1.8×10^{-4}	1.0×10^{-6} ⇓ 1.8×10^{-3}
Alarm Level	1.0×10^{-9} ⇓ 1.8×10^{-6}	1.0×10^{-7} ⇓ 1.8×10^{-4}	1.0×10^{-6} ⇓ 1.8×10^{-3}	1.0×10^{-5} ⇓ 1.8×10^{-2}
Config. Code	0001	0000	0002	0003

Leak-Rate Measuring Ranges For 1% SF_6 / ml/s				
Probe Type	**Capillary**	**H Sinter**	**M Sinter**	**L Sinter**
Range	0.0×10^{-8} ⇓ 1.8×10^{-5}	0.0×10^{-6} ⇓ 1.8×10^{-3}	0.0×10^{-5} ⇓ 1.8×10^{-2}	0.0×10^{-4} ⇓ 1.8×10^{-1}
Calibration Level	1.0×10^{-10} ⇓ 1.8×10^{-7}	1.0×10^{-8} ⇓ 1.8×10^{-5}	1.0×10^{-7} ⇓ 1.8×10^{-4}	1.0×10^{-6} ⇓ 1.8×10^{-3}
Alarm Level	1.0×10^{-8} ⇓ 1.8×10^{-5}	1.0×10^{-6} ⇓ 1.8×10^{-3}	1.0×10^{-5} ⇓ 1.8×10^{-2}	1.0×10^{-4} ⇓ 1.8×10^{-1}
Config. Code	0001	0000	0002	0003

Leak-Rate Measuring Ranges For 0.1% SF_6 / ml/s				
Probe Type	**Capillary**	**H Sinter**	**M Sinter**	**L Sinter**
Range	0.0×10^{-7} ⇓ 1.8×10^{-4}	0.0×10^{-5} ⇓ 1.8×10^{-2}	0.0×10^{-4} ⇓ 1.8×10^{-1}	0.0×10^{-3} ⇓ 1.8
Calibration Level	1.0×10^{-10} ⇓ 1.8×10^{-7}	1.0×10^{-8} ⇓ 1.8×10^{-5}	1.0×10^{-7} ⇓ 1.8×10^{-4}	1.0×10^{-6} ⇓ 1.8×10^{-3}
Alarm Level	1.0×10^{-7} ⇓ 1.8×10^{-4}	1.0×10^{-5} ⇓ 1.8×10^{-2}	1.0×10^{-4} ⇓ 1.8×10^{-1}	1.0×10^{-3} ⇓ 1.8
Config. Code	0001	0000	0002	0003

Distributed in North America by Fume Hood Certified, LLC | www.fumehoodcertified.com | (623) 226-8260

Appendix B PREVENTATIVE MAINTENANCE

This section gives information on general preventative maintenance for the Q200. The following points need to be checked periodically to maintain reliable performance and safe operation.

B.1 CALIBRATION

The unit should be calibrated every time it is powered up after a suitable period to allow the operation of the instrument to stabilise and at least once for every eight hours of continuous use. Setting the re-calibration interval in the 'Calibrate' menu (see Section 8 for more information) will flag up a reminder when a re-calibration is due. The user should keep a note of the calibration factor, as any large deviation between one calibration and the next would suggest some change to the operating conditions of the detector. Ensure when calibrating that the calibration standard being used is still within the validity date noted on the label on the cylinder. In general, a standard leak has a validity of twelve months after manufacture, after which the standard leak should be re-calibrated. Your supplier can supply calibration standards or arrange for re-calibration.

B.2 BATTERY

Maintain the battery in a fully charged state whenever possible. Check the battery voltage periodically using the 'Diagnostics' menu. Voltages below 12 volts indicate that the battery should be left on charge overnight. From time to time remove the battery and check for any cracks in the case and around the terminals. Spare batteries can be obtained from your supplier (see Appendix D for more information). We recommend that the inline T2A/250V fuse be replaced on a regular basis.

B.3 SINTER

Check the sinter periodically looking for any accumulation of dirt on the outer surface; if necessary replace the sinter following the procedure laid out in Appendix I. A high detector background signal and erratic measurements could indicate that the sinter is becoming contaminated. Spare sinters can be obtained from your supplier (see Appendix D for more information).

B.4 DETECTOR CLEANING

When high leak rates are being measured or when in environments with high background, the detector may become contaminated. Check the detector signal (frequency) in a clean background by examining the frequency reading in the 'Diagnostics' menu. A frequency above 10 kHz may indicate that the detector is becoming contaminated. If this is found to be the case, set a detector cleaning period in the 'Configure' menu and perform a cleaning cycle (see Section 8 for more information).

Pressing the ⓘ key in either program or run mode causes the detector temperature to be increased to 110°C for the clean time entered. Leave the gas supply turned on. It is recommended that the battery charger is connected and powered during Clean otherwise the battery charge is quickly depleted. A warning message 'Warn: No Charger' is displayed on the console display if cleaning is attempted without the

Distributed in North America by Fume Hood Certified, LLC | www.fumehoodcertified.com | (623) 226-8260

charger connected. Either press the ⓘ key to override the warning and continue, connect the battery charger and press the ⓘ key to continue or press the ⓞ key to cancel the Clean.

As the Cleaning process progresses the current detector temperature and remaining Clean time will be displayed alternately every ten seconds on the console. The hand unit bar graph will show the current temperature in terms of a bar graph, with full scale being equal to 100°C (all LED's on). Cleaning may be aborted by pressing the ⓞ key or operating the key-switch. The detector will be cooled down to the normal operating temperature of 50°C, a two-tone audio output will be issued and the instrument will be ready for use, provided the alarm LED on the hand unit is not illuminated (see Appendix C for more information). While cooling down, the instrument will display a cooling message with the current detector temperature on the console. The hand unit bar graph will display the current temperature in terms of a bar graph, above 100°C will be equal to zero (all LED's off) and full scale will be equal 50°C (all LED's on).

B.5 PROBE

Remove the probe occasionally and check that it is not blocked. Spare probes may be obtained from your supplier (see Appendix D for more information).

B.6 CABLE

Check the cable between the console and the hand units for any sign of wear and damage, ensure that the cable is firmly retained at both ends.

B.7 GAS SUPPLY

Ensure that there are no leaks from any pipe-work associated with an external gas supply and there is adequate head pressure at the external gas supply (3 to 4 bar) to maintain the gas flow. Always check the internal gas cylinder and that the cylinder is still within its test period validity date (on the plastic disc on the neck of the cylinder) before refilling. The cylinder must be returned to the supplier every five years to be re-tested. Spare gas cylinders may be obtained from your supplier (see Appendix D for more information).

B.8 WIPE TESTING

The detector may need to be wipe tested for leakage at regular intervals, depending upon local regulations. In the UK, this should be done at least once every 24 months. Consult your supplier who will be able to perform the wipe testing service.

B.9 BATTERY CHARGER

The battery charger requires no maintenance, however should the charger fail to operate correctly the only maintenance that the user can perform is changing the mains fuse by following this procedure:

- Disconnect the unit from the mains supply.

Distributed in North America by Fume Hood Certified, LLC | www.fumehoodcertified.com | (623) 226-8260

- Slide out the fuse drawer on the main's inlet socket and locate the two fuses.
- Remove the fuse in the active position and replace with the spare fuse.
- Refit the fuse drawer; connect the charger to the mains supply and re check.

If the unit still does not perform correctly, seek help from your supplier.

> Do not attempt to remove the lid from the battery charger as this will result in hazardous voltages being exposed.

Distributed in North America by Fume Hood Certified, LLC | www.fumehoodcertified.com | (623) 226-8260

Appendix C FAULT/ERROR/WARNING MESSAGES

This section explains the possible faults, errors and warnings that can occur and suggests corrective actions.

C.1 FAULTS

All faults are non-recoverable, when they occur the warning LED is lit and an appropriate fault message displayed. The instrument will then shut down and not respond to any key press or action from the operator. With the exception of Battery and Low Gas faults, faults that result in fault messages being displayed cannot be remedied by the user and the instrument should be returned to the supplier for investigation and rectification work to be carried out.

C.1.1 EPROM FAULT

This fault will only occur at power up. The display will show:

Fault: EPROM

If this fault occurs consult your supplier.

C.1.2 MEMORY FAULT

This fault will only occur at power up. The display will show:

FAULT: MEMORY

If this fault occurs consult your supplier.

C.1.3 BATTERY FAULT

If the battery voltage falls below 10.5 Volts the battery needs to be recharged or the battery is near the end of its working life. The display will show:

Fault: Low Battery

If this fault occurs, recharge or replace the battery.

C.1.4 LOW GAS FAULT

This fault will occur 1 hour after the first warning to check the gas (if the warning is cancelled and is not remedied by replacing or re-filling the internal gas cylinder). This fault will be disabled if the gas supply is set to external. The display will show:

Fault: Low Gas

If this fault occurs, replace or refill the gas cylinder.

C.1.5 SYSTEM FAULT

Distributed in North America by Fume Hood Certified, LLC | www.fumehoodcertified.com | (623) 226-8260

If the 5-Volt rail falls below 4.65 Volts the system has become unusable. The display will show:

Fault: System

If this fault occurs consult your supplier.

C.1.6 TEMPERATURE FAULT

If the temperature of the system becomes unstable the system has become unusable. The display will show:

Fault: Temperature

If this fault occurs contact your supplier.

C.1.7 HEATER FAULT

If the detector temperature is increasing and the system exceeds 60°C in normal sample mode or exceeds 120°C in clean mode the heater control circuit could be faulty. The display will show:

Fault: Heater

If this fault occurs consult your supplier.

C.1.8 PRT OPEN CIRCUIT FAULT

Note: The PRT is the temperature-measuring element in the detector assembly and is an abbreviation for Platinum Resistance Thermometer.

If the PRT is detected to be open circuit the instrument has become unusable. The display will show:

Fault: PRT O/C

If this fault occurs consult your supplier.

C.1.9 PRT SHORT CIRCUIT FAULT

If the PRT is detected to be short circuit the instrument has become unusable. The display will show:

Fault: PRT S/C

If this fault occurs consult your supplier.

Distributed in North America by Fume Hood Certified, LLC | www.fumehoodcertified.com | (623) 226-8260

C.2 ERRORS

All errors either recover automatically after displaying the appropriate message for two seconds or require a ⓔ key press to clear the error. Errors that require the ⓔ key to be pressed will light the warning LED and give a periodic audio signal.

C.2.1 CORRUPT CONFIGURATION CODE ERROR

This error only occurs on power up. The display will show:

Error: Config Code

If this error occurs switch off your instrument and contact your supplier.

C.2.2 PROGRAM PARAMETERS CORRUPT ERROR

This error only occurs on power up if any stored program parameters have been corrupted. The display will show:

Error: Program

To clear this error, press the ⓔ key. The display will then show:

Reset Parameters No

Pressing the △ or ▽ keys will scroll the response between yes and no. To clear the parameters (the recommended course of action) set the response to yes and press the ⓞ key; the following message will be displayed for two seconds:

Parameters Cleared

To leave the parameters as they are (not recommended) set the response to no and press the ⓞ key.

C.2.3 SOFTWARE VERSION ERROR

This error will only occur on power up. When a new version of software has been installed, the display will show:

Error: S/W Version

Pressing the ⓔ key will cause an audio warning to sound and the display will show the following message:

Error: Program

Distributed in North America by Fume Hood Certified, LLC | www.fumehoodcertified.com | (623) 226-8260

To clear this error, press the ⊘ key. The display will then show:

Reset Parameters No

Pressing the △ or ▽ keys will scroll the response between yes and no. To clear the parameters (the recommended course of action) set the response to yes and press the ⊘ key; the following message will be displayed for two seconds:

Parameters Cleared

To leave the parameters as they are (not recommended) set the response to no and press the ⊘ key.

C.2.4 INVALID DATE ERROR

This error only occurs when setting the date. If an invalid date is entered **e.g.** 31/02/94 this message will be displayed for two seconds before returning to the date setting parameters. The display will show:

Error: Invalid Date

C.2.5 INVALID CALIBRATION ERROR

If when performing a calibration, on pressing the ⊘ key to accept a calibration, the new calibration factor is less than 0.3 or greater than 3.0 this error message will be displayed for two seconds. The display will show:

Error: Invalid Cal

Since an 'Invalid Cal' error leaves the calibration factor unchanged, it is possible to continue leak checking. However, entering the sample mode from standby by pressing the ⊘ key, the instrument will display a 'Warn: Not calibrated ' message to remind the user that the instrument is being used in a manner where the results obtained may not be reliable.

'Invalid Cal' errors can result from poor instrument performance caused by contamination of the detector or sinter, a standard leak whose validity period has expired or the standard leak not having been turned on.

C.2.6 NO LEVELS SET ERROR

This error only occurs when entering sample mode. If the user tries to enter sample mode without having set an alarm or a calibration level, this error message will be displayed for two seconds. The display will show:

Error: No Levels Set

This message is displayed for two seconds whereupon the display will then show:

Distributed in North America by Fume Hood Certified, LLC | www.fumehoodcertified.com | (623) 226-8260

Warn: Not Calibrated

This warning may be cancelled by pressing the ◎ key after which the instrument will return to the 'Standby' state.

C.3 WARNINGS

All warnings are recoverable, when a warning occurs the warning LED is lit, a periodic audio tone generated and an appropriate warning message displayed. To cancel warning messages press the ◎ key. The warning LED will stay on until the warning condition is cleared. All warnings function in this manner and can occur anywhere unless stated otherwise.

C.3.1 NOT CALIBRATED WARNING

This warning occurs when attempting to enter the sample mode from 'Standby' and reminds the user that, although a calibration or alarm level has been set, a calibration has not been performed. The display will show:

Warn: Not Calibrated

This warning message may be cancelled using the ◎ key, whereupon the instrument will enter the sample mode and allow leak rates or concentrations to be measured with the calibration factor set to the default value of 1.000. This warning will recur every time an attempt is made to enter the sample mode and the warning can always be cancelled.

If, as a result of the warning, the key-switch is set to 'Program' and a calibration is attempted and no calibration level has been set, the display will show:

No cal leakrate set

This message prompts the user to enter a leak rate for the standard leak to be used for calibration in the 'Calibrate' menu prior to performing a calibration. The message appears for two seconds before reverting to the 'Calibrate' message.

C.3.2 CHECK DETECTOR WARNING

This warning can only occur in sample mode. This warning will occur when the background frequency is above 20 kHz and an attempt is made to zero the display, this may occur at power up when the frequency can rise as high as 130 kHz. The display will show:

Warn: Check Detector

An intermittent audio warning will sound and the warning LED will be illuminated. The warning may be cancelled by pressing the ◎ key. However, the warning will recur when the zero key is used again. No reliance should be placed on the results if the instrument is operated in this manner.

The detector frequency can be examined in the 'Diagnostics' menu. The detector frequency can be examined with the pump both off and on by the use of the ◎ key.
If the detector frequency is high, for example >10kHz with the pump off (the default state on entering the 'Diagnostics' menu), a contaminated detector or an argon supply

Distributed in North America by Fume Hood Certified, LLC | www.fumehoodcertified.com | (623) 226-8260

that contains excessive levels of oxygen or other electron capturing gases may be suspected. Detector contamination is dealt with by entering a cleaning cycle. A contaminated gas supply may result from incorrect filling of the internal cylinder, allowing excessive levels of oxygen to enter the internal cylinder or a contaminated supply cylinder used as an external gas supply or to fill the internal cylinder.

If the detector frequency is satisfactory with the pump off, for example <5kHz, but high with the pump on, the inlet, either sinter or capillary should be removed and the seals inspected for damage allowing air leaks into the detector with the pump on. In this case the seal on the inlet probe should be changed. If the seal appears satisfactory, the inlet may be contaminated and the instrument should be cleaned with the pump on by entering the clean mode directly from the frequency display in the 'Diagnostics' menu having set the pump to on in the frequency display in the 'Diagnostics' menu. If this does not improve the detector frequency, the inlet, either sinter or capillary should be changed. Appendix D contains details of the part numbers of the seals and inlets that may be required.

C.3.3 NO CHARGER WARNING

This warning is given when clean mode is entered with no battery charger connected. The display will show:

Warn: No Charger

Performing a clean without a battery charger seriously depletes the battery life. Pressing the key again will cause the instrument to continue with the clean cycle although the battery charger is not supplying power to the instrument. Pressing the key will abort the clean.

C.3.4 NO PRINTER WARNING

When the user presses the key at various points if no printer is connected this warning will be displayed. The display will show:

Warn: No Printer

Pressing the key will cancel the warning.

C.3.5 CHECK BATTERY WARNING

When the battery voltage falls below 11 Volts this warning is activated to indicate the battery will either need replacing or recharging within a short period. The display will show:

Warn: Check Battery

The recommended course of action would be to check the continuity of the inline fuse in case a high resistance connection is present, recharge or replace the battery.

Distributed in North America by Fume Hood Certified, LLC | www.fumehoodcertified.com | (623) 226-8260

C.3.6 CHECK GAS WARNING

The warning is activated when the pressure in the gas bottle falls below the pressure setting of the pressure switch (10 bar). The display will show:

Warn: Check Gas

This warning is cleared when the bottle pressure goes back above 10 bar or the ⊘ key is pressed. However, cancelling the warning without replacing or replenishing the argon cylinder will produce a 'Low Gas' fault after 60 minutes. (See C.1.4)

This warning will not occur when running from an external gas supply.

C.3.7 STORAGE BUFFER FULL WARNING

This warning can only occur in sample mode when the user tries to store more than 100 readings. The display will show:

Warn: Storage Buffer

An intermittent audio warning will sound and the warning LED will be illuminated. Pressing the ⊘ key will cancel the warning. The warning will recur if an attempt is made to store another result.

At this point the operator can connect a printer to the serial port on the rear of the console and press the ⊘ key to print all the results or press the ◇ and ⊘ keys together to clear the storage buffer. If the storage buffer is cleared the display will show:

Storage Buffer Clear

C.3.8 CALIBRATION DUE WARNING

This warning occurs when re-calibration interval is exceeded. The display will show:

Warn: Cal Due

This error is cleared when the instrument is re-calibrated.

Distributed in North America by Fume Hood Certified, LLC | www.fumehoodcertified.com | (623) 226-8260

Appendix D SPARES/OPTIONS LIST

A range of spares and options are available for use with the Q200, these are listed in the following table along with their relevant order numbers. To obtain any item listed in the table please contact your supplier and order quoting the relevant part number(s).

Spare/Option	Order Number
H Sinter. Range 10^{-8}-10^{-5}, 100% Trace Gas	200097
M Sinter. Range 10^{-7}-10^{-4}, 100% Trace Gas	200130
L Sinter. Range 10^{-6}-10^{-3}, 100% Trace Gas	200170
Sinter 'O' ring Seal.	2/674
Capillary Probe Kit. Range 10^{-10}-10^{-7}, 100% Trace Gas	200128
Capillary Probe Seals 'O' Ring Needle Probe Disc Seal	2/671 37107
40 Column printer with RS232 printer cable.	200123
RS232 printer cable	200132
Printer Paper	7/3791
Battery charger and battery charger adapter.	200133
Spare battery assembly.	200076
Gas cylinder spanner.	7/3445 (European) 7/3446 (USA)
User manual (English).	200120
Full Gas cylinder (UK, 600ml)	200095
Battery charger fuse - T1A, 240V, 20mm.	3/273
Euro regulator blanking plug.	61158
American regulator blanking plug	61159
Analogue output cable	200124
Probe (standard)	200078
Probe (flexible) Note that the flexible probe is used on Sinter inlets only.	200085
Gas bottle filling jig (Euro)	99020

Distributed in North America by Fume Hood Certified, LLC | www.fumehoodcertified.com | (623) 226-8260

Gas bottle filling jig (American)	99030
Standard leak kit. (Leak rate to be specified).	10050
Inline battery fuse T2A/250V, 1¼"	3/291

Distributed in North America by Fume Hood Certified, LLC | www.fumehoodcertified.com | (623) 226-8260

Appendix E RS232 CONNECTOR DETAILS

This section details the pin-outs and connections for the RS232 connector that provides both the serial output and the analogue output for connection to a printer and chart recorder respectively.

Pin	Signal name / function	Direction of signal
1		
2	RxD/Not used.	-
3	Txd/Transmitted data.	From 200 to printer.
4		
5		
6	DSR/200 Ready	From 200 to printer.
7	GND	-
8		
9		
10		
11		
12		
13		
14		
15		
16		
17		
18		
19		
20	DTR/Printer ready.	From printer to 200.
21		
22		
23	Analogue ground.	From 200 to Chart recorder.
24	Analogue output.	From 200 to Chart recorder.
25		

Distributed in North America by Fume Hood Certified, LLC | www.fumehoodcertified.com | (623) 226-8260

Appendix F APPLICATIONS

This section describes some of the typical application areas in which the Q200 is used.

- Location of SF_6 leaks in high voltage electrical switchgear.
- Fume cupboard and glove box checks.
- Location of leaks in military components, **e.g.** missiles, mines and torpedoes.
- Leak testing fire extinguishers.
- Leak testing of hazardous material storage vessels.
- General leak detection in any equipment that may be pressurised with SF_6 and where a high sensitivity, point leak detection technique is required.

Distributed in North America by Fume Hood Certified, LLC | www.fumehoodcertified.com | (623) 226-8260

Appendix G CHANGING THE INTERNAL GAS CYLINDER

This section details the procedure for changing the internal gas cylinder on the Q200, refer to Figure 5 for help:

- Turn off Power and Gas and allow the pressure gauge on the regulator to fall to zero.
- Unlock the ¼ turn fasteners (3 positions), raise console cover and engage the support arm located on the right hand inner edge of the console lid, accessible when the console lid is raised.
- Use gas cylinder spanner provided to unscrew cylinder connection.
- Release the cylinder retaining straps and withdraw cylinder.
- Fit new cylinder, ensuring that the replacement gas is of the correct purity and that the PTFE sealing washer is in place on the regulator stem and is undamaged.
- Refit the nut from the regulator stem onto the cylinder outlet and tighten the nut.
- Refit cylinder retaining straps, lower console cover and lock the ¼ turn screws.
- Turn on the gas and check gauge for correct pressure.

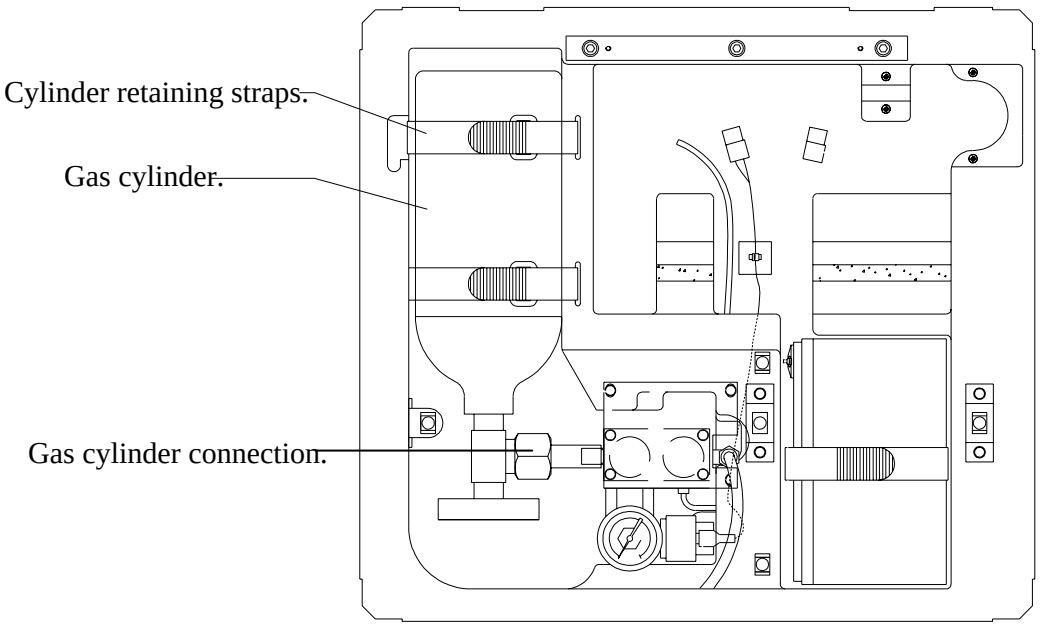

Figure 5: Changing the Internal Gas Cylinder

Distributed in North America by Fume Hood Certified, LLC | www.fumehoodcertified.com | (623) 226-8260

Appendix H INSTALLING/CHANGING THE BATTERY

This section details the procedure for installing and changing the battery on the Q200, refer to Figure 6 for help.

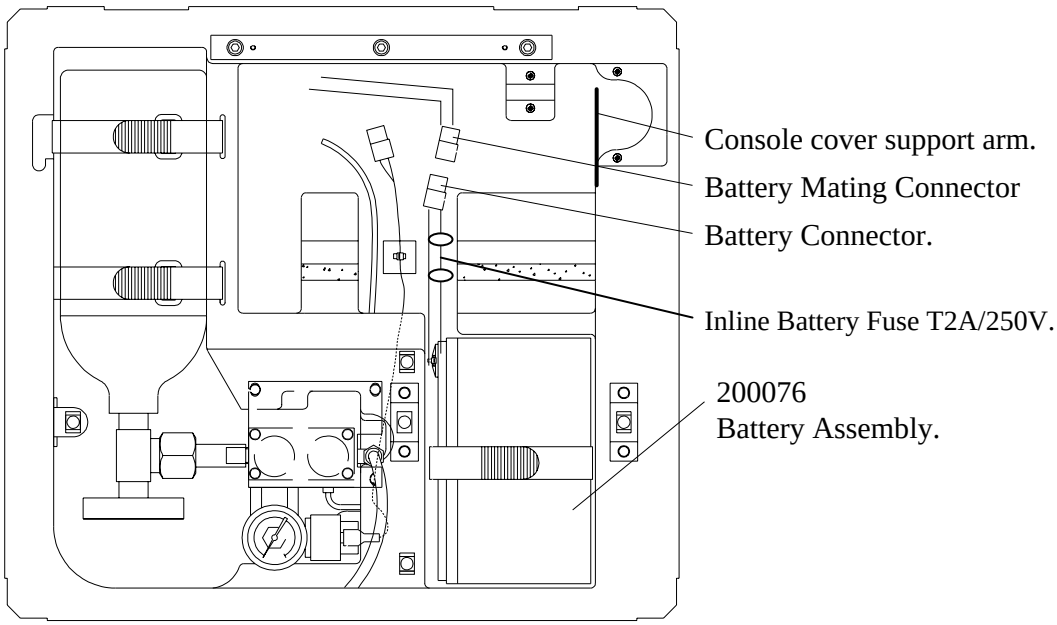

Figure 6: Changing the Battery

H.1 INSTALLING THE BATTERY AS SHIPPED

When the instrument is shipped to a customer the battery is disconnected to reconnect the battery the procedure is as follows:

- Turn off power.
- Unlock the ¼ turn fasteners on the console cover (3 positions), raise console cover and engage support arm.
- Unlock battery cover ¼ turn fasteners (2 positions), and remove battery cover.
- Locate the battery lead (red and black cables) and connect it to its mating connector/lead (red and black cables) that is secured to the main cable. The connectors are polarised, ensure that they are mated together in the correct orientation.
- Replace battery cover and lock ¼ turn fasteners.
- Lower console cover and lock ¼ turn fasteners.

H.2 CHANGING THE BATTERY

To install a new battery the procedure is as follows:

Distributed in North America by Fume Hood Certified, LLC | www.fumehoodcertified.com | (623) 226-8260

- Turn off power.
- Unlock ¼ turn fasteners (3 positions), raise console cover and engage support arm.
- Unlock battery cover ¼ turn fasteners (2 positions), and remove battery cover.
- Locate the battery lead (red and black cables) and separate the connector that runs into the main cable.
- Lift battery assembly out of case.
- Install new battery assembly in the console.
- Locate the battery lead and connect it to its mating connector/lead that is secured to the main cable. The connectors are polarised, ensure that they are mated together in the correct orientation.
- Replace battery cover and lock ¼ turn fasteners.
- Lower console cover and lock ¼ turn fasteners.
- Power up the instrument and inspect for correct voltage in the 'Diagnostics' menu.

Distributed in North America by Fume Hood Certified, LLC | www.fumehoodcertified.com | (623) 226-8260

Appendix I CHANGING THE PROBE/SINTER

This section details the procedure for changing the Q200's hand unit probe and sinter.

I.1 CHANGING THE PROBE

To remove the probe (if attached): Take a firm hold and pull firmly away from the hand unit nozzle. To replace the probe, engage it firmly into the aperture located at the front of the hand unit nozzle. Refer to Figure 7 for help.

Push probe firmly into nozzle aperture.

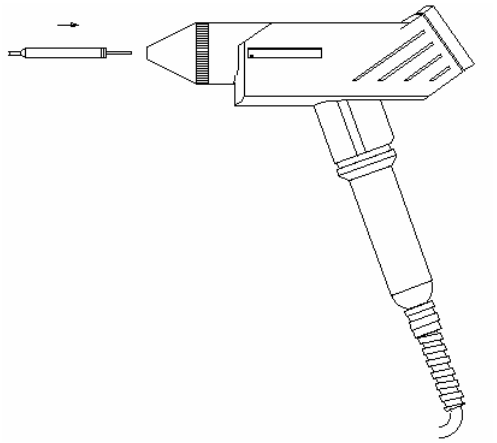

Figure 7: Fitting the Probe

I.2 CHANGING THE SINTER

The sinter is located on the front face of the detector assembly behind the hand unit nozzle, illustrated in Figure 8. To change the instrument's sinter, the procedure is as follows:

- Turn off the power and gas supplies and allow the instrument to cool.
- Unscrew the hand unit nozzle.
- Remove the old sinter and discard.
- Inspect the sinter port in the front of the detector assembly to ensure that there is no particulate residue in the port. Any particulate matter in the port should be removed using tweezers or some other mechanical means. Attempting to blow the port clean may result in particulate matter either entering the detector cell or blocking the ports to the detector cell which could result in erratic operation at best or instrument failure requiring the instrument to be serviced at worst.
- Examine the new sinter and ensure that it is clean and the o-ring seal is free from damage.

Distributed in North America by Fume Hood Certified, LLC | www.fumehoodcertified.com | (623) 226-8260

- Carefully install the new sinter, tightening the sinter into the detector assembly using a broad bladed screwdriver to ensure that the slot in the front of the sinter in not damaged.

- Replace the nozzle.

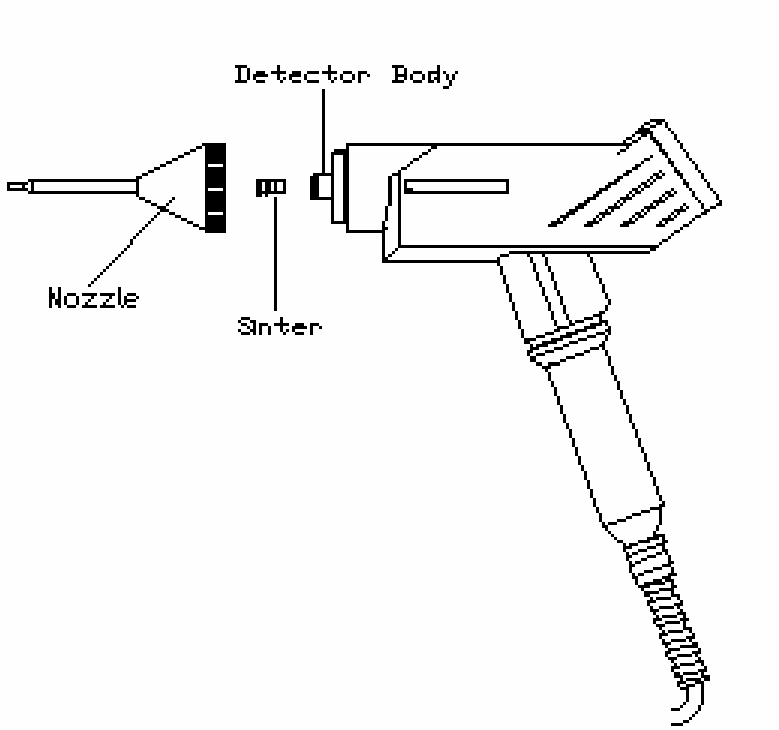

Figure 8: Location of Sinter

Warning
The detector body may be at an elevated temperature.
The instrument should be allowed to cool before changing the sinter.

Distributed in North America by Fume Hood Certified, LLC | www.fumehoodcertified.com | (623) 226-8260

Appendix J LEAK RATE AND CONCENTRATION FORMULAE

Measurements of leak rates may be converted to different units or to a concentration using the following formulae:

J.1 LEAK RATE IN GRAMS PER YEAR (GM/YEAR)

gm/year = (leak rate in ml per second * gas molecular weight * 31536000)/24500

where: gas molecular weight = 146 for SF_6.
31536000 = Number of seconds in a year.
24500 = Molar gas volume at 298°K (room temperature).

J.2 LEAK RATE IN OUNCES PER YEAR (OZ/YEAR)

oz/year = leak rate in grams per year/28

Where: 28 grams = 1 ounce.

J.3 CONCENTRATION IN PARTS PER MILLION (PPM)

ppm = leak rate in ml per second x10^6

Distributed in North America by Fume Hood Certified, LLC | www.fumehoodcertified.com | (623) 226-8260

Appendix K PROGRAM STRUCTURE

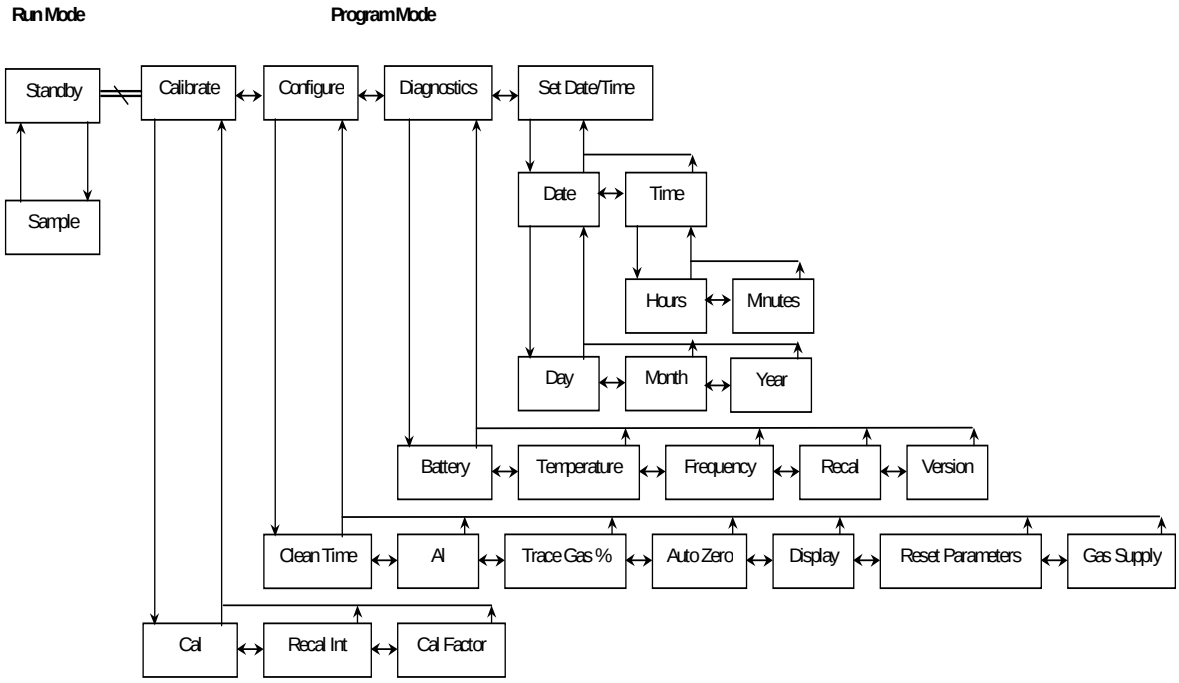

Figure 9: Q200 Menu Structure

Distributed in North America by Fume Hood Certified, LLC | www.fumehoodcertified.com | (623) 226-8260

Appendix L GLOSSARY

This glossary explains some of the terminology used in this manual.

Auto	Relates to the way that a leak rate is displayed. In Auto mode the leak rate is displayed as a mantissa plus variable exponent.
Auto Zero	Relates to a software algorithm that automatically 'tracks out' background frequency drift, due to fluctuation in concentrations of tracer gas in the leak testing environment.
Baud	A unit of signalling speed. The number of discrete signal events per second when communicating between the Q200 and an attached printer.
Bits	Are binary units the number of which relates to the data length of information sent from the instrument to a printer.
Cal	Relates to the Calibration level on the Q200.
Calibrate	Relates to the Calibration menu. A menu containing parameters required to Calibrate the Q200. Calibration is a sequence of actions whereby the instrument measures a known standard leak and then calculates a multiplication (calibration) factor that is applied to all future readings.
Cal Factor	The calibration factor is the ratio by which the actual measurement of leak rate obtained from a standard leak differs from notional measurement of a leak of the same value that is stored in the software. This factor will be applied to all subsequent readings taken in sample mode. This factor enables the instrument to accurately measure leaks using the standard leak used during calibration as a reference.
Configure	Relates to the Configuration menu. A menu containing parameters required to Configure the Q200 for use.
Deg	Abbreviation for degrees, the unit of temperature measurement.
Diagnostics	Relates to the Diagnostics menu. A menu containing information essential to diagnosing possible faults.
Digital	Relates to the method of displaying leak rates. In Digital mode the Q200 uses the 20 character display to display type of tracer gas being detected, actual leak rate and units of measurement.
Error: Invalid Cal	A message displayed when the Q200 cannot calibrate to a standard leak. This occurs when the frequency response to a standard leak differs sufficiently from that expected for the calibration leak rate entered in the 'Calibrate' menu.

Distributed in North America by Fume Hood Certified, LLC | www.fumehoodcertified.com | (623) 226-8260

Fixed Exponent	Relates to the way that a leak rate is displayed. In Fixed Exponent mode the leak rate is displayed as a mantissa that can exceed 9.9 plus a fixed exponent.
Offer Probe To Leak	Prompts the user to insert the Q200 hand unit probe, to the nozzle cone of a standard leak.
Parity	Is a means of checking transmitted data.
Peak Hold	A hold function started by pressing the key on the hand unit. Once pressed the displays on the hand unit and console will display the maximum signal level encountered since last time the key was pressed. With peak hold selected the audio level still indicates the instantaneous signal level.
Recal	Relates to the time remaining before re-calibration is due.
Recal Int	Re-calibration interval. Relates to the period that the Q200 is switched on between calibrations.
Units	Units of measurement: ml/s : milli litres per second (leak rate). ppm : parts per million (concentration). The following units are available by calculation: gm/yr : grams per year (leak rate). oz/yr : ounces per year (leak rate).
Zero	A function initiated by pressing the key on the hand unit, whereby the detector signal at that instant becomes the reference from which all future measurements are taken. Used to zero out the effects of background contamination.

Distributed in North America by Fume Hood Certified, LLC | www.fumehoodcertified.com | (623) 226-8260

Index

A
alarm **2-1**, **6-2**, **6-3**, 7-1, 8-1, 8-2, 8-4, 10-1, 10-8, 10-9, 11-1, A-1, B-2, C-5
applications 2-1, 10-4, F-1
argon 1-5, 2-1, 4-1, 4-3, A-1
auto zero ..... 8-5, 10-7, i, ii
B
bar graph 6-1, **6-2**, **6-3**, 7-2, 8-4, A-1, B-2
battery charger 1-5, 3-1, 3-2, 4-2, 4-3, 4-4, 5-2, B-2, B-3, C-6, C-7
C
calibrate ..... **5-2**, 8-1, 8-2, 8-3, 9-1, 9-2, 10-9, B-1, i, ii
calibrating 8-1, 8-2, 9-1, B-1
calibration factor 8-3, 9-1, 9-2, B-1, C-4
calibration level ..... 1-6, **6-2**, **6-3**, 8-2, 8-4, 9-1, 11-1, A-1, C-5, i
cancel **5-2**, B-2, C-5
case 2-1, 3-1, 3-2, 4-1, 6-1, A-2, B-1, H-2
cautions 1-1
chart recorder 11-1, E-1
clean 4-3, 5-1, **5-2**, 8-8, 9-1, 10-6, B-1, B-2, C-2, C-6, C-7, C-8
clock **5-2**, 8-9, 8-10
concentration ..... iii, 8-4, 10-1, A-2, J-1, ii
contamination ..... 8-3, 8-5, 10-1, 10-7, B-1, ii
cylinder 1-5, 2-1, 3-1, 4-3, 4-4, A-1, B-2, C-2, G-1
D
date 5-2, 8-1, 8-9, 8-10, B-2, C-4
detector 1-1, 2-1, 4-1, 4-3, 5-1, **5-2**, 6-1, 7-2, 8-3, 8-8, 9-1, 10-1, 10-6, 10-7, A-1, B-1, B-2, C-2, C-5, C-6, I-2, ii
diagnostics ..... 8-1, 8-7, 8-8, B-1, H-2, i
digital ..... A-1, i
display type i
disposal 1-6
E
errors 5-2, 7-1, 10-1, C-1, C-3
external gas supply 1-5, 4-3, 4-4, 7-1, 8-7, B-2, C-7
F
faults ..... 7-1, C-1, i
frequency ..... 8-5, 8-8, B-1, C-6, i, ii
front panel 4-3, 5-1, 5-2
G
gas supply 1-5, 4-3, 4-4, 6-1, 7-1, 8-2, 8-7, A-1, B-2, C-1, C-7
general tips 10-4
H
hand unit ... 1-1, 1-6, 2-1, 6-1, 6-2, **6-3**, 7-1, 7-2, 8-2, 8-6, 8-8, 9-1, 9-2, 10-6, 10-7, 11-1, A-2, B-2, I-1, ii
I
indicators 6-1, **6-2**
initialisation 7-1, 7-2, 10-1
installation 4-1
K
keyswitch 3-1, 5-1, 7-2, 8-1, 8-11, B-2
L
leak detector 2-1

Distributed in North America by Fume Hood Certified, LLC | www.fumehoodcertified.com | (623) 226-8260

leak rate ..... iii, 2-1, **6-2**, 8-2, 8-4, 9-2, 10-1, 10-6, 11-1, A-1, A-2, J-1, i, ii
leakmeter 200ii, 1-1, 1-5, 2-1, 3-1, 4-1, 10-1, 10-6, 10-8, A-1, B-1, F-1, G-1, H-1, I-1, i, ii
M
maintenance B-1, B-3
membrane.....1-1, B-1, I-1, I-2
N
nozzle..... 1-1, 9-1, 9-2, I-1, I-2, ii
O
options 3-2
P
peak hold .....**6-2**, 9-2, ii
power supply.....1-5, A-1
print..... **5-2**, 10-7, 10-8, C-8
printer.....2-1, **5-2**, 7-1, 8-9, 10-8, 11-1, C-7, C-8, E-1, i
printout.....10-8
probe.....iii, 1-6, 6-1, 9-1, 9-2, 10-6, 10-7, B-2, I-1, ii
R
re-calibration ..... 8-2, 8-8, B-1, C-8, ii
re-calibration interval..... 8-2, 8-8, B-1, C-8
reset parameters.....6-2
S
sample..... **5-2**, 6-1, **6-2**, 8-3, 9-1, 10-1, 10-6, 10-7, C-2, C-5, C-6, C-7, i
sinter 1-1
software version..... C-4
spares 3-2
standard leaks.....3-2
standby 5-1, **5-2**, **6-2**, 7-2, 8-11, 10-1
storage..... 1-1, 10-7, C-7, C-8, F-1
store **6-2**, 10-7, 10-8, C-7
T
temperature.....1-6, **5-2**, 7-2, 8-3, 8-8, A-2, B-2, C-2, I-2, J-1, i
time 5-2, 8-2, 8-3, 8-8, 8-9, 8-10, 8-11, A-1, B-2
trace gas 2-1, 4-2, 8-2, 8-4, 8-8, 10-1, 10-6, 10-7, 10-8, 10-9
U
unpacking.....3-1
V
volume 5-2, 10-6
W
warnings.....1-1, 7-1, 10-1, C-1, C-5
wipe testing..... B-2
Z
zero.....**6-2**, 8-5, 10-7, i, ii

Distributed in North America by Fume Hood Certified, LLC | www.fumehoodcertified.com | (623) 226-8260

FUME HOOD CERTIFIED

Q200 Sales, Service and Training

Fume Hood Certified is the exclusive North American distributor of the D-Industrial Q200 SF6 analyzer. We handle sales, calibration, repairs, spare parts and hands-on training for ASHRAE 110 tracer gas testing.

Scan to watch Q200 setup, calibration and testing videos

https://www.youtube.com/channel/UC4tidm8r_LTFdwmY08PXi0Q

Fume Hood Certified, LLC

20817 N 21st Ave, Suite 14
Phoenix, AZ 85027

Contact

(623) 226-8260
alex@fumehoodcertified.com
www.fumehoodcertified.com
Training: fumehood.academy